Contents Basic Catalogue 1/4

Industrial Fabrication

Vehicule Fabrication

Applications

Sales Organisation

Charactéristics and Codification of Motors

Installation and maintaining JTEKT-HPI Pumps	F.T R 0152
Oll recommendations	F.T R 0003
Recommendations concerning the drive type of JTEKT-HPI hydraulic Pumps	F.T R 0009
Codification of single Pumps	F.T R 0149
Codification of Multibodied Pumps	F.R R 0150
Pumps characteristics	F.T R 0005

Hydraulic geard pumps Series 0

Max. working conditions	F.T R 0220
Mounting possibilities	F.T R 0229
Pumps Type AAN - Implantation F	F.T 00 289

Hydraulic geard pumps Series 1

Max. working conditions	F.T R 0221
Mounting possibilities	FT R 0230
Pumps Type BAN - Implantations C and F	F.T 10 290
Type CBN - Implantations C and F	F.T 10 291
Multiple geared pumps	F.T 10 347

Contents Basic Catalogue 2/4

Hydraulic gear pumps Series 2 Flat front body

Max. working conditions		F.T R 0222
Mounting possibilities		F.T R 0231
Pumps	Type AAN - Implantation H	F.T 20 292
	Type AAN - Implantation C	F.T 20 214
	Type AAN - Implantation F	F.T 20 215
	Type BAN - Implantations H and C	F.T 20 293
	Type BAN - Implantations F and B	F.T 20 953
	Type DBN - Implantation C	F.T 20 294
	Type DCN - Implantation C	F.T 20 296
	Type DUK - Implantation C	F.T 20 297
Multiple geared pumps		F.T 20 348

Hydraulic gear pumps Series 2 Thick front body

Max. working conditions		
Mounting possibilities		F.T R 0223
Pumps	Type DBP - Implantations H and C	F.T R 0232
Multiple geared pumps		F.T 20 295
		F.T 20 890

Contents Basic Catalogue 3/4

Hydraulic gear pumps Series 3 Flat front body

Max. working conditions		F.T R 0224
Mounting possibilities		F.T R 0233
Pumps	Type AAN - Implantation H	F.T 30 309
	Type BAN - Implantation H	F.T 30 314
	Type BAN - Implantation B	F.T 30 888
	Type CBN - Implantation H	F.T 30 315
Multiple geared pumps		F.T 30 349

Hydraulic gear motors Series 3 Thick front body

Max. working conditions		
Mounting possibilities		F.T R 0225
Pumps	Type AAP / AEP - Implantation H	F.T R 0234
	Type ADP - Implantation H	F.T 30 310
	Type ZFC - Implantation H	F.T 30 311
Multiple geared pumps		F.T 30 316
		F.T 30 849

Contents Basic Catalogue 4/4

Hydraulic gear pumps Series 5 Flat front body

Max. working conditions	F.T R 0226
Mounting possibilities	F.T R 0235
Pumps Type BAN - Implantation H	F.T 35 299

Hydraulic gear pumps Series 5 Thick front body

Max. working conditions	F.T R 0227
Mounting possibilities	F.T R 0219
Pumps Type AAP - Implantation H	F.T 35 300

Hydraulic gear pumps Series 4 Flat front body

Max. working conditions	F.T R 0228
Mounting possibilities	F.T R 0236
Pumps Type CBN - Implantation H	F.T 40 298

JTEKT-HPI presentation

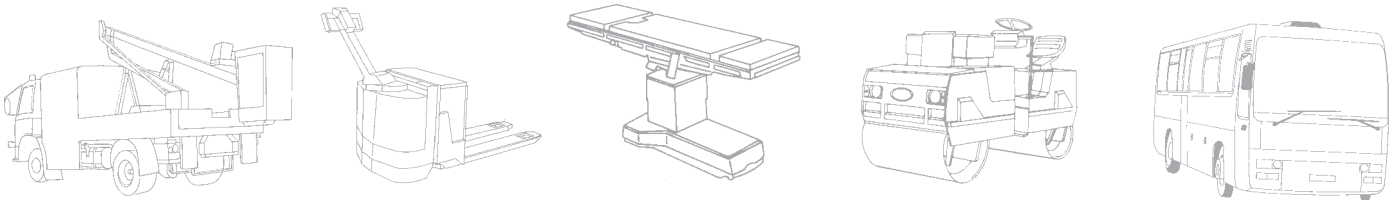

JTEKT-HPI

ZI - 26, rue Condorcet
BP 87
94432 Chennevières sur Marne CEDEX

Tél: 01 49 62 28 00
Fax: 01 45 76 68 40
sales@jtekt-hpi.com

INDUSTRIAL FABRICATION

Administrative building

Research center

Poduction center

JTEKT HPI

VEHICULE FABRICATION

BLOIS
plant (41)

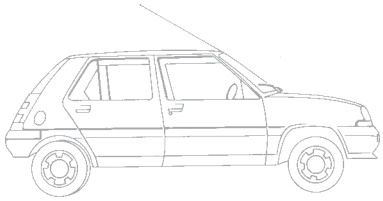

Applications

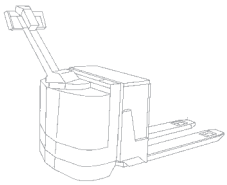

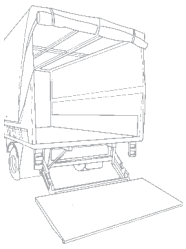

HANDLING

AGRICULTURAL

APPLICATIONS

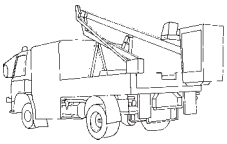

ROAD

PUBLIC WORKS

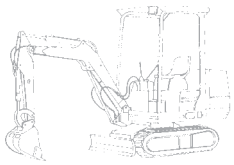

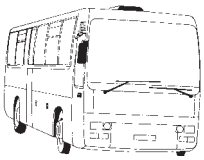

TRANSPORT

HEALTHCARE

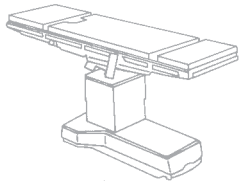

VEHICULE

JTEKT HPI

Tel : (33) 01 49 62 28 00
Fax : (33) 01 45 76 68 40

SALES ORGANISATION
ORGANISATION de VENTE
VERKAUFSORGANISATION

JAPAN
JAPON
JAPAN

FRANCE
FRANCE
FRANKREICH

CANADA
CANADA
KANADA

U.S.A
ETATS - UNIS
U.S.A

UNITED KINGDOM
ROYAUME UNI
GROßBRITANIEN

SPAIN
ESPAGNE
SPANIEN

BELGIUM
BELGIQUE
BELGIEN

NETHERLANDS
PAYS - BAS
NIEDERLANDE

SWITZERLAND
SUISSE
SCHWEIZ

AUSTRIA
AUTRICHE
ÖSTERREICH

SWEDEN
SUEDE
SCHWEDEN

DENMARK
DANEMARK
DÄNEMARK

FINLAND
FINLANDE
FINLAND

NORWAY
NORVEGE
NORWEGEN

AUSTRALIA
AUSTRALIE
AUSTRALIEN

NEW - ZEALAND
NOUVELLE - ZELANDE
NEUSELAND

ITALY
ITALIE
ITALIEN

LEBANON
LIBAN
LIBANON

IRELAND
IRELANDE
IRELAND

GERMANY
ALLEMAGNE
DEUTSCHLAND

MAROCCO
MAROC
MAROKKO

CHINA
CHINE
CHINESISCHES

INDIA
INDE
INDIEN

EGYPT
EGYPTE
ÄGYPTEN

TURKEY
TURQUIE
TÜRKEI

GREECE
GRECE
GRIECHENLAND

Diffusion: 01 / 2007

JTEKT HPI
ZI - 26, Rue Condorcet - B.P. 87 - 94432 CHENNEVIERES-SUR-MARNE CEDEX - FRANCE
Tel: 01 - 49 - 62 - 28 - 00 Fax: 01 - 45 - 76 - 68 - 40
www.jtekt-hpi.com

JTEKT HPI

CATALOGUE BASIC (B10)

HYDRAULIC GEAR PUMPS Series 0 FLAT FRONT BODY

HYDRAULIC GEAR PUMPS Series 1 FLAT FRONT BODY

HYDRAULIC GEAR PUMPS Series 2 FLAT FRONT BODY

HYDRAULIC GEAR PUMPS Series 2 THICK FRONT BODY

HYDRAULIC GEAR PUMPS Series 3 FLAT FRONT BODY

HYDRAULIC GEAR PUMPS Series 3 THICK FRONT BODY

HYDRAULIC GEAR PUMPS Series 5 FLAT FRONT BODY

HYDRAULIC GEAR PUMPS Series 5 THICK FRONT BODY

HYDRAULIC GEAR PUMPS Series 4 FLAT FRONT BODY

BASIC CATALOGUE (B10)

Codifications and Characteristics

Installation and maintaining JTEKT-HPI Pumps F.T R 0152

Oils recommendations F.T R 0003

Recommendations concerning the drive type of JTEKT-HPI hydraulic pumps F.T R 0009

Codification of single Pumps F.T R 0149

Codification of Multibodied Pumps F.T R 0150

Different mounting possibilities between basic multiple Pumps F.T R 0143

Pumps Characteristics F.T R 0005

RECOMMENDATIONS for INSTALLING and MAINTAINING JTEKT-HPI PUMPS

Our pumps were studied and manufactured to bring you complete satisfaction. They were designed with first quality materials, produced according to modern processes and controlled by strict tests.
However, for the best use, it is absolutely necessary to make some arrangements when mounting and when using. The major 10 are the following :

1- Mounting

On a rigid support, fixed to the driving motor, make sure of the perfect concentricity of the pump centering with the driving shaft (5/100 maximum, when reading), according to the series.
Pump can be placed in whatever position.

2- Driving

Apart from the driving torque, no radial nor axial effort must be applied on pump shaft to ensure a good efficiency and a good service.
See technical data sheet F.T R 0009 (pump with outrigger bearing excepted).

In an installation with :
- rapid duty cycle.
- frequent pressure variations.
- high working pressure.
- important variation of the hydraulic pump speed.

it is recommended to examin the pump coupling regulary and to slightly lubricate the shaft and the sleeve coupling to avoid frictional oxidation phenomena (fretting).

When the pump is driven with parallel keyed or splined shaft, it is recommended that the shaft be lubricated with bearing grease containing molybdenum disulphide.

3- Pipes

Selecting the correct pipe is very important. Apart from flexible hoses, use preferably cold drawn stel tubes, free from calamine and oxidation inside.

Alll hoses must be properly burred and cleaned. No trace of stranger bodies nor dust must be left; make sure of this before the mounting.

1) Never hot-bend hoses so as to avoid oxidation disposals.
2) Seal hose or pipe end during storage.
3) During the mounting, do not leave them on the floor.
4) Make sure of their cleanness until the final mounting.

Suction hose :
It must be made in such a manner so as to get a maximum oil speed of 2,5 m:s, less if possible, mostly for big flows.

Dimension readings and approximative characteristics subject to modifications.

Below are some flow indications according to the dimensions of hoses :

1 / 4 "	8 x 13	=	8 l / min
3 / 8 "	12 x 17	=	17 l / min
1 / 2 "	15 x 21	=	27 l / min
3 / 4 "	21 x 27	=	52 l / min
1 "	26 x 34	=	80 l / min
1 " 1 / 4	33 x 42	=	130 l / min
1 " 1 / 2	40 x 49	=	190 l / min
2 "	50 x 60	=	295 l / min
2 " 1 / 2	66 x 76	=	513 l / min
3 "	80 x 90	=	750 l / min

The hose must be as straight as possible . Avoid elbows and connections . Straight angle elbows are prohibited . Narrowing forbidden .

The suction hose must be as short as possible (inferior to 1,50 m) ; beyond this length , lower the flow speed and ask our Technical Departments for information .

The level between the suction port and the oil must not exceed 0,75 m when the tank is lower down . It is recommended to place the tank on load , that is to say above the pump .

Do not use soft materials to make hoses , depressure and temperature tending to bring sided closer and reduce the flow surface .

Take care of the good screwing of connections to avoid air inlet .

4- Tanks

Tank capacity must be so that in maximum duty , the oil temperature must stabilize at maximum 50 / 60 °C . The quantity of oil that can be taken to ensure the various cycles must be taken into account .

The purpose of a tank , in addition of being a receiver , is to quickly dissipate the calories stored by the circuit when there is no cooling device beside .

Furthermore , it must allow the oil to clarify from the possible emulsions and consequently to avoid the creation of emulsion .

All hoses leading to tank must dive into the fluid .

The fluid coming back to tank must come back to tank very slowly to avoid disturbances on the suction hose.

Tank must be perfectly clean , realized in teme plate or fitted with an hydrocarbon-resistant inside painting .

It must be designed in order that an inspection flap allows a careful cleaning before mounting and during maintenance .

It must be dustproof .

The shape must be simple , either parallelepipidal or cylindrical .

Dimension readings and approximative characteristics subject to modifications .

Level control (tightness of connections)

One of the maintenance factors is watching the tank level. According to the tank capacity, a continuous hose or connector leakage may lead to significant pump oil loss.

Consequences are always damaging to the pump : possible air suction, increased circuit temperature, oil-aging, etc .....

It is therefore necessary to examine regularly all circuit connections to make sure that there is no leakage.

5- Oil filtration

To ensure the pump a good efficiency and a long life duration, the filtration of the hydraulic fluid is indispensable.

Do not forget that the pump and the various components of the circuit are lubricated by the convoyad fluid.

At suction : Fit the suction hose with a suction strainer submerged in the tank, the filtration efficiency of which shall be 125 µ.
Do not use a suction strainer with a higher efficiency owing to possible underfeeding effects on the pump.
Flow capacity : 1 dm2 for a flow of 10 l / min.

At pressure or at tank return : Filter having a filtration capacity of 10 or 15 µ. A metal filter can be used.

6- Air filtration

Most of the pumps are prematurely aging due to abrasion coming from external elements to the tank. It is indispensable to fit the tank with a true air filter and not a simple breather.
The air filter must have a 5 µ filtration efficiency.
All other parts of the tank must be airproof.

7- Pump Protection

All hydraulic installations must have a pressure relief valve to protect the pump, and this for each direction of rotation.
Several kinds can be employed :
- manually operated.
- differential.
- piloted.

Whatever the type, the following is required :
- quick opening.
- low opening range (lower than 20 bar)
- low closing range (lower than 10 bar)
- It must be pulsationfree.
- Make sure of the flow capacity of the pressure relief valve according to the pump flow.

Dimension readings and approximative characteristics subject to modifications.

8- Fluid to be employed

A good quality of oil is to be used.

The more important the duty cycle is, the higher the pressure and driving speed are, the more indispensable it is to choose a good quality of fluid.

An oil with viscosity 4 to 5 °E (30 to 40 cSt) to 40 °C must be used.

Take into account the fact that the higher the circuit temperature is, the more necessary it is to choose a high viscosity oil.

In many applications, motor oils can be used; they bring excellent results. For lubrication and life duration, choose class SAE 20 - 40 multigrade oils.

9- Maximum working temperature

Maintaining an hydraulic circuit requires a control, particulary of the oil temperature.

In general, it is recommended not to exceed 50 to 60 °C. If the latter temperature is exceeded, it would be necessary either to increase the tank volume, or to use a cooler.

Also check whether circuit obstructions or abnormal rolling of some distribution or regulation devices are not causing the heating.

In case the working or ambiant temperature conditions require a working temperature higher than 60 °C, it is then necessary to use a higher viscosity oil (for instance, 5 °E at 70 °C instead of 50 °C).

Ambiant temperature - 15 °C to + 60 °C.

Also make sure that no external heat supply disturbs the functioning of the pump. In this case, inform our Technical Department who will give you useful advices, amoung others Viton seals for temperatures between 70 and 130 °C will be recommended (example : hydraulic pump in contact with the carter of a diesel motor that can work under temperatures of 120 °C).

10- Oil aging

The use of an oil that has lost its lubrication properties is a cause for wear and tear of the pump and of the circuit devices.

Temperature variations, rolling in the distribution and regulation valves cause a molecular modification of the fluid in the more or less long-term.

The rapidity of the aging depends on the oil volume in the circuit, on the important temperature variations and on the rolling under pressure.

According to the energy conversion rate of the circuit, it is necessary to provide for changing oil between 500 and 1000 duty hours.

(N.B : analysis in case of a big quantity of oil).

11- Additional information

For any further details, seek advice from our Technical Departments.

Dimension readings and approximative characteristics subject to modifications.

TYPE	ISO	CASTROL	ELF	ESSO	FINA
HM	32	HYSPIN AWS 32	ELFOLNA DS 32	NUTO H 32	HYDRAN TS 32
	46	HYSPIN AWS 46	ELFOLNA DS 46	NUTO H 46	HYDRAN TS 46
	68	HYSPIN AWS 68	ELFOLNA DS 68	NUTO H 68	HYDRAN TS 68
HV	32	HYSPIN AWH 32	HYDRELF DS 32	UNIVIS N 32	HYDRAN TSX 32
	46	HYSPIN AWH 46	HYDRELF DS 46	UNIVIS N 46	HYDRAN TSX 46
	68	HYSPIN AWH 68	ELFOLNA DS 68	UNIVIS N 68	HYDRAN TSX 68
HE	32	CARELUBE HTG 32			BIOHYDRAN TMP 32
	46			UNIVIS BIO SHP 46	BIOHYDRAN TMP 46
	68				BIOHYDRAN TMP 68
OILS DIESELS MOTORS			PERFORMANCE XR 15W-40	FARM 4 15W- 40	KAPPA SUPER 10W
		RX SUPER PLUS 15W-40	PERFORMANCE SUPER D 15W-40	ESSOLUBE X 301 10W	KAPPA SUPER 20W20
			PERFORMANCE TROPHY DX 15W-40	ESSOLUBE XT 301 15W-40	KAPPA SUPER 15W40

TYPE	ISO	FUCHS LUBRIFIANTS INDUSTRIE	MOBIL	SHELL	TOTAL
HM	32	RENOLIN EXTRA 32S	MOBIL DTE 24	TELLUS 32	AZOLL ZS 32
	46	RENOLIN EXTRA 46S	MOBIL DTE 25	TELLUS 46	AZOLLA ZS 68
	68	RENOLIN EXTRA 68S	MOBIL DTE 26	TELLUS 68	AZOLLA ZS 68
HV	32	RENOLIN EQUIGRADE 32	MOBIL DTE 13 M	TELLUS T et ST 32	EQUIVIS ZS 32
	46	RENOLIN EQUIGRADE 46	MOBIL DTE 15 M	TELLUS T et ST 46	EQUIVIS ZS 46
	68	RENOLIN EQUIGRADE 68	MOBIL DTE 16 M	TELLUS T et ST 68	EQUIVIS ZS 68
HE	46			NATURELLE HFE	HYDROBIO 46
OILS DIESELS MOTORS		TITAN TRUCK 15W-40			RUBIA S 10W
		TITAN UNIVERSAL HD 15W-40		RIMULAX 15W - 40	
		TITAN UNIVERSAL HD 20W-50			

OILS TYPE HM : Refined mineral oils with anti-rust, anti - oxydation and anti - wear properties.
Application hydraulic systems in general. (Max pressure 2900 PSI, Max speed 2000 RPM)

OILS TYPE HV : Oils type HM with improved viscosity / temperature properties.
Application car industry, marine equipement, high performance hydraulic (high pressures and speds).

OILS TYPE HE : Biodegradable hydraulic oils, synthetic base (esthers).
Can be used in all hydraulic equipments requiring a HV oil.

OILS TYPE HFAE , HFAS , HFB , HFC , HFD : Water emulsion in oil or synthetic fluid, consult our technical departments. The type of elastomer and the compatibility defoinition must be subject to an agreement between the supplier and the final customer.

OIL RECOMMENDATIONS

Dimension readings and approximative characteristics subject to modifications .

F.T R 0003

RECOMMENDATION CONCERNING the DRIVE TYPE of JTEKT-HPI HYDRAULIC PUMPS

As the JTEKT-HPI hydraulic pumps are designed with shafts on bush bearings, it is necessary to avoid any axial or radial load and, in order to obtain the best performances and a longer life time, to pay some keen attention to the transmission driving type.

The hereunder sketches show the couplings to realize or to proscribe in order to avoid any kind of damage of the pump.

Recommended couplings :
F.T R 0009 1/3 2/3

Conditionnally recommended couplings :
F.T R 0009 2/3 3/3

Proscribed couplings :
F.T R 0009 3/3

RECOMMENDED COUPLINGS

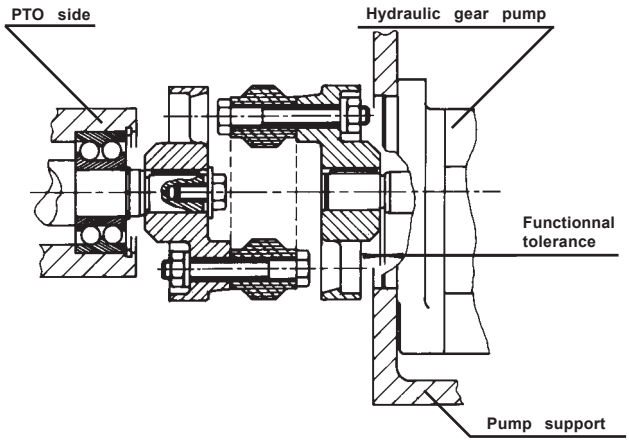

Mounting with elastic 3 parts coupling.

The pump shafts can be :

- **Straight keyed shafts**
- **Tapered shafts**
- **Splined shafts**

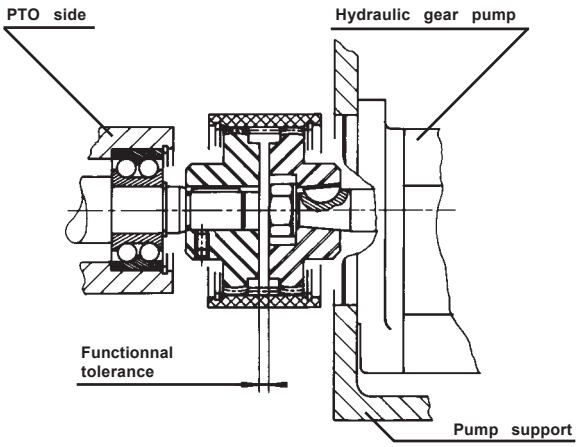

Mounting with 3 parts coupling with bulged gear.

The pump shafts can be :

- **Straight keyed shafts**
- **Tapered shafts**
- **Splined shafts**

Dimension readings and approximative characteristics subject to modifications.

F.T r 0009 1/3

RECOMMENDED COUPLINGS

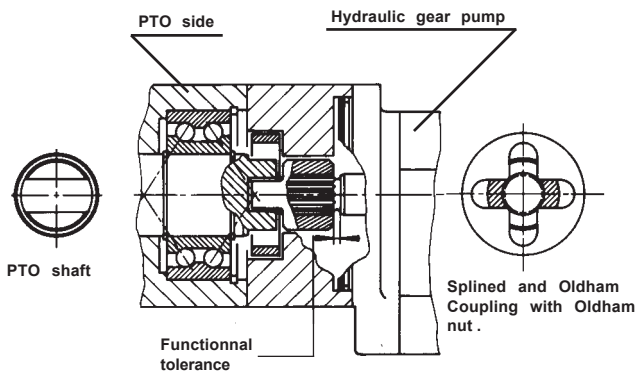

Mounting with coupling and Oldham coupling .

The pump shafts can be :

- Straight keyed shafts
- Tapered shafts
- Splined shafts

RECOMMENDED LUBRICATION .

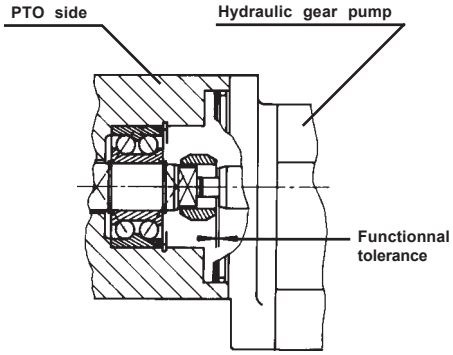

Mounting with Oldham coupling .

Tang drive shaft on PTO and pump shaft .

RECOMMENDED LUBRICATION .

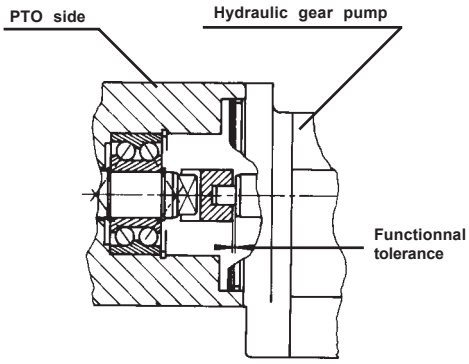

Mounting with Oldham coupling .

Tang drive shaft on PTO and pump shaft .

RECOMMENDED LUBRICATION .

CONDITIONALLY ALLOWED COUPLINGS

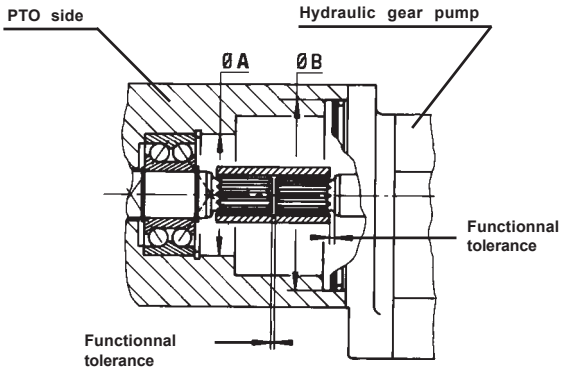

Mounting with splined coupling (Spigot on free flank) .

Tolerated coupling provided that there is a perfect concentricity between Ø A and Ø B .

Concentricity ⩽ 0,03 (according to the pump type and capacity) .

Dimension readings and approximative characteristics subject to modifications .

F.T R 0009 2/3

CONDITIONALLY ALLOWED COUPLINGS

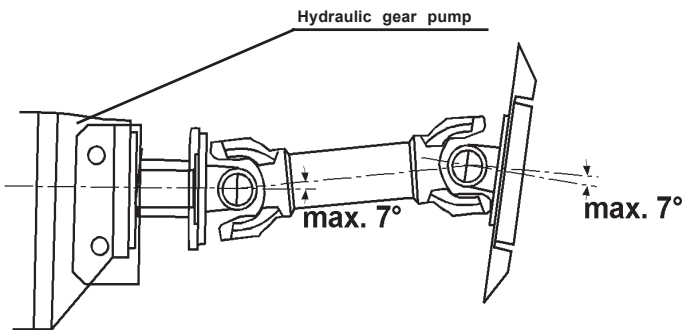

Homocinetic coupling

PROSCRIBED COUPLINGS

(Direct drive of the pump shaft on the PTO shaft)

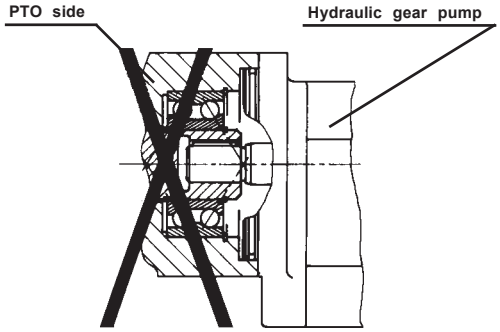

Straight keyed drive .

Hyperstatic mounting .

Impossibility to line up properly the pump shaft and the PTO shaft .

INEVITABLE PUMP SHAFT - CONSTRAINT

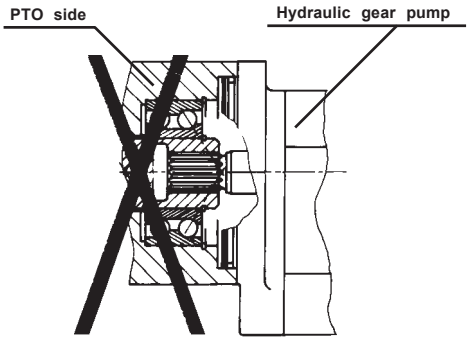

Splined drive .

Hyperstatic mounting .

Impossibility to line up properly the pump shaft and the PTO shaft .

INEVITABLE PUMP SHAFT - CONSTRAINT

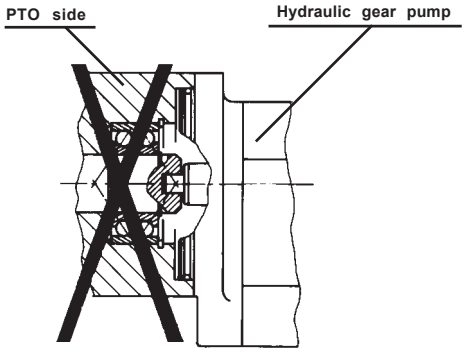

Tang drive .

Pump shaft directly into the PTO shaft .

INEVITABLE PUMP SHAFT - CONSTRAINT

Dimension readings and approximative characteristics subject to modifications .

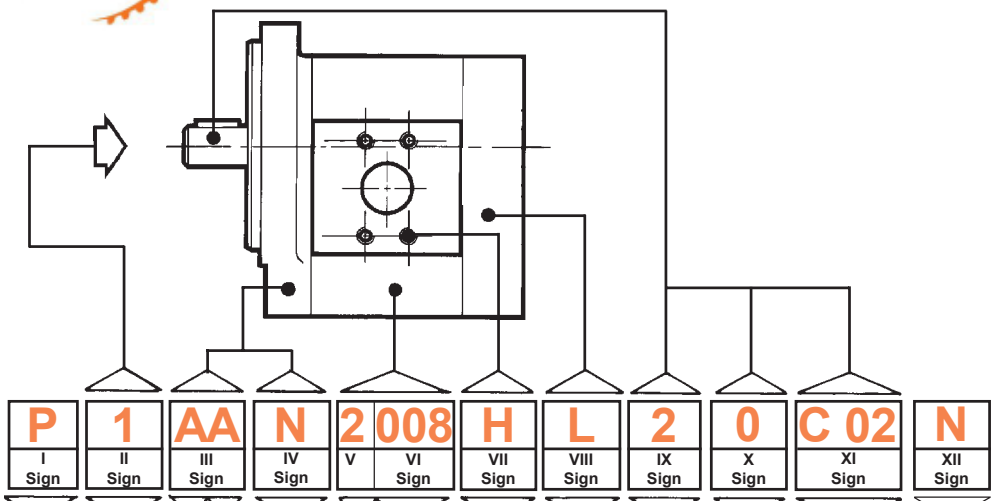

SHAFT SEAL

- N Nitrile
- V Viton

PRIMARY SHAFT CODE

See data sheets

TYPE

Pump P

DIRECTION of ROTATION

- Clockwise 1
- Anti - clockwise 2

SECONDARY SHAFT

0 Without shaft

FRONT BODY

MOUNTING FLANGE

- 2 and 4 holes (USA - ISO) A
- 4 holes (Englisch - Italian) B
- 2 and 4 holes (French) C
- 2 and 4 holes (German) D
- 4 holes Z

A , B , C , D , F , U , ...
Execution variation

PRIMARY SHAFT

- 1 Tapered
- 2 Straight keyed
- 3 Splined
- 4 Tang

REAR BODY

L Without port on rear body (Standard)

FLAT FRONT BODY

- Without tightness on spigot joint N
- With tightness on spigot joint (Only for Serie 2 Type DUK) K

THICK FRONT BODY WITH FRONT BEARINGS

Power Series

- Without tightness on sigot joint P
- Power tank C

PORT LOCATION

- H Implantation HPI
- B Italian implantation (BAN Series 2 and 3)
- C Square implantation
- F Threaded ports
- Y ISO implantation (only for 2,6)

TYPE of the SERIES

- Series 0
- Series 1
- Series 2
- Series 3
- Series 4
- Series 5

CAPACITY in the SERIE (cc / rev)

- 0,25 - 0,50 - 0,75 - 1,00 - 1,25 - 1,50 - 2,00
- (00)1 - (00)2 - (00)3 - (00)4 - (00)5 - (00)6
- (00)4 - (00)6 - (00)8 - (0)10 - (0)12 - (0)14 - (0)15 - (0)18 - (0)22 - (0)26 - (0)30
- (0)20 - (0)25 - (0)31 - (0)40 - (0)50 - (0)60 - (0)71 - (0)80 - (0)90 - 100
- 075 - 110 - 150 - 175 - 212 - 250
- (0)43 - (0)52 - (0)62 - (0)72 - (0)83 - (0)93 - 103 - 125 - 140 - 153

(0) - Only to get the conformity of the codification

CODIFICATION of SINGLE PUMPS " BASIC "

Dimension readings and approximative characteristics subject to modifications .

F.T R 0149

PUBLISHING 06 / 02 / 2002

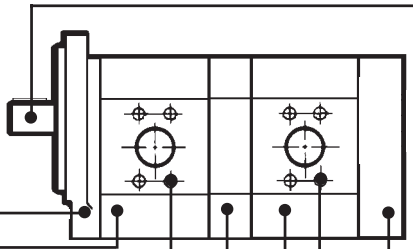

P	1	AA	N	2	008	H	A	2	008	H	L	2	0	C02	N
I Sign	II Sign	III Sign	IV Sign	V	VI Sign	VII Sign	VIII Sign	IX	X Sign	XI Sign	XII Sign	XIII Sign	XIV Sign	XV Sign	XVI Sign

TYPE

Pump P

DIRECTION of ROTATION

Clockwise 1
Anti - clockwise 2

FRONT BODY

MOUNTING FLANGE

2 and 4 holes (USA - ISO) A
4 holes (Englich - Italian) B
2 and 4 holes (French) C
2 and 4 holes (German) D
4 holes Z

A , B , C , D , F , U , ...
Exécution Variations

FLAT FRONT BODY
without tightness on spigot joint N
With tightness on spigot joint K
(Only for Serie 2 Type DUK)

THICK FRONT BODY WITH FRONT BODY
Power series
Without tigntness on spigot joint P
Power tank C

TYPE of the SERIE

Series 1
Series 2
Series 3

CAPACITY in the SERIE (cc / rev)

(00)1 - (00)2 - (00)3 - (00)4 - (00)5 - (00)6
(00)4 - (00)6 - (00)8 - (0)10 - (0)12 - (0)14 - (0)15 - (0)18 - (0)22 - (0)26 - (0)30
(0)20 - (0)25 - (0)31 - (0)40 - (0)50 - (0)60 - (0)71 - (0)80 - (0)90 - 100

(0) - Only to get the conformity of the codification

SHAFT SEAL

N Nitrile
V Viton

PRIMARY SHAFT CODE

See data sheets

SECONDARY SHAFT

0 Without shaft

PRIMARY SHAFT

1 Tapered
2 Straight keyed
3 Splined
4 Tang

REAR BODY

L Without ports on rear body (Standard)

JUNCTION BODY

A Common suction ports
D Independant suction ports (Internal communication) (Except Series 1)

PORT LOCATION

H Implantation HPI
B Italian implantation (BAN Series 2 and 3)
C Square implantation
F Threaded ports

F.T R 0150

CODIFICATION OF MULTIBODIED PUMPS " BASIC "

PUBLISHING 06 / 02 / 2002

MODEL	(VIII Sign)	
	Communication between suction ports (Capacity of the pump without suction ≥ half of the capacity of the front section) Code A	Indépendant inlet side (communication of leaks) (Oil and tank to be necessarily identical) Code D
1 / 1		
2 / 1		
2 / 2		
3 / 2		
3 / 3		

Dimension readings and approximative characteristics subject to modifications .

ATTENTION : Versions 2 / 1 **are not feasible** in DCN and DUK -

Types not manufactured

For CODIFICATION , see data sheet F.T R 0150

DIFFERENT MOUNTING POSSIBILITIES BETWEEN " BASIC " MULTIPLE PUMPS

F.T R 0143

PUMPS CHARACTERISTICS

Series (V Sign)	MODEL (VI Sign)	Capacity	PEAK PRESSURE		MAX. WORKING PRESSURE		Maxi speed	NOMINAL FLOW at 1500 rev / min	NOMINAL FLOW at Maxi speed	Input power in kW at 1000 RPM and 100 bar	Input torque at 100 bar in m.daN
		cc / rev	bar	PSI	bar	PSI	RPM	l / min	l / min		
0	025	0,25	280	4060	240	3480	8000	0,37	2	0,09	0,09
	050	0,50	280	4060	240	3480	8000	0,75	4	0,16	0,19
	075	0,75	250	3625	210	3045	8000	1,12	6	0,21	0,20
	100	1	250	3625	210	3045	8000	1,50	8	0,27	0,26
	125	1,25	200	2900	170	2465	6000	1,87	7,5	0,29	0,28
	150	1,50	150	2175	125	1812	6000	2,25	9	0,32	0,31
	200	2	125	1812	105	1523	5000	3	10	0,40	0,39
1	001	1,02	300	4350	255	3700	8000	1,53	8,16	0,32	0,30
	002	2,05	300	4350	255	3700	8000	3,07	16,40	0,48	0,46
	003	3,07	300	4350	255	3700	7000	4,60	21,40	0,67	0,64
	004	4,09	250	3625	210	3045	6000	6,13	24,50	0,87	0,83
	005	5,12	200	2900	170	2465	6000	7,68	30,70	1,07	1,02
	006	6,14	150	2175	125	1812	6000	9,21	30,70	1,22	1,16
2	004	4,65	280	4060	240	3480	3500	6,97	16,20	0,92	0,78
	006	6,45	280	4060	240	3480	3500	9,67	22,50	1,27	1,15
	008	8,25	280	4060	240	3480	3500	12,37	28,80	1,62	1,52
	010	10,12	280	4060	240	3480	3500	15,18	35,30	1,95	1,88
	012	12	280	4060	240	3480	3500	18	42	2,31	2,25
	* 014	13,8	250	3625	210	3045	3500	20,70	48,30	2,73	2,62
	015	15,52	250	3625	210	3045	3500	23,25	52,50	2,94	2,77
	018	19,12	200	2900	170	2465	3500	28,65	66,80	3,63	3,32
	022	22,87	175	2537	150	2175	3500	34,2	79,80	4,30	4,02
	026	27,6	175	2537	150	2175	3000	41,4	82,80	5,16	4,74
	030	31,2	175	2537	150	2175	3000	46,8	93,60	5,77	5,40

* NOTA: The 2014 pumps can be manufactured only with shafts of 10 B02 - 10 C02 - 30 A0 - 30 D01 type.

Dimension readings and approximative characteristics subject to modifications .

Following Series

PUMPS CHARACTERISTICS

Series (V Sign)	MODEL (VI Sign)	Capacity	PEAK PRESSURE		MAX. WORKING PRESSURE		Maxi speed RPM	NOMINAL FLOW at 1500 rev / min	NOMINAL FLOW at maxi speed	Input power in kW at 1000 RPM and 100 bar	Input torque at 100 bar in m.daN
		cc / rev	bar	PSI	bar	PSI		l / min	l / min		
3	020	21,10	275	3987	235	3408	3000	31,65	63,3	4	3,74
	025	25,80	275	3987	235	3408	3000	38,70	77,4	4,90	4,63
	031	32,10	275	3987	235	3408	3000	48,15	96,3	6,10	5,73
	040	41,50	275	3987	235	3408	3000	62,25	124,5	7,85	7,37
	050	51,65	250	3625	215	3120	3000	77,47	154,9	9,77	9,21
	060	62,60	225	3282	190	2780	2500	93,90	156,5	11,85	11,05
	071	73,55	225	3282	190	2780	2500	110,32	183,8	13,92	13,08
	080	82,95	200	2900	170	2465	2200	124,42	182,4	15,59	14,60
	090	92,95	150	2175	130	1885	2000	139,42	185,9	17,47	16,47
	100	103,9	150	2175	130	1885	2000	155,85	207,8	19,40	18,17
5	043	43,06	300	4350	255	3700	3000	64,59	129	8,28	8,05
	052	52,91	300	4350	255	3700	3000	79,36	158,5	9,94	9,51
	062	62,75	300	4350	255	3700	3000	94,12	188	11,79	11,34
	072	72,59	300	4350	255	3700	3000	108,88	217,5	13,64	13,17
	083	83,67	280	4060	240	3480	2700	125,50	226	15,55	15
	093	93,51	250	3625	215	3120	2700	140,26	252,5	17,38	16,82
	103	103,3	250	3625	215	3120	2700	154,95	279	19,20	18,63
	125	125,5	250	3625	215	3120	2600	188,25	326	23,32	22,61
	140	140,2	250	3625	215	3120	2500	210,30	350,5	26,05	25,33
	153	153	250	3625	215	3120	2400	229,50	367,5	28,27	27,52
4	075	075	200	2900	170	2465	2500	112,5	187,5	19,37	14,10
	110	112	200	2900	170	2465	2500	168	275	28,42	20,60
	150	150	200	2900	170	2465	2500	225	375	28,60	28,10
	175	175	175	2537	150	2175	2500	262,5	437,5	33,67	32,80
	212	212	150	2175	130	1885	2500	318	530	40	39
	250	250	125	1812	105	1523	2000	375	500	46,46	45,23

Preceding Series

Dimension readings and approximative characteristics subject to modifications .

F.T R 0005 2/2

Home - general contents

Basic catalogue contents

CATALOGUE BASIC (B10)

Hydraulic gear pumps

Series 0

PUMPS CHARACTERISTICS

MOUNTING POSSIBILITIES

PUMPS TYPE : AAN

Edition 01 / 2003

B10 | 018 | 00

MAX. WORKING CONDITIONS

MODEL (V-VI Sign)	Capacity	PEAK PRESSURE		MAX. WORKING PRESSURE		Maxi Speed RPM	NOMINAL FLOW at 1500 RPM	NOMINAL FLOW at Maxi Speed	Input power (kW) at 1000 RPM and 100 bar	Input torque at 100 bar and m.daN	Approximate weight Kg
	cc / rev	bar	PSI	bar	PSI		l / min	l / min			
0025	0,25	280	4060	240	3480	8000	0,37	2	0,03	0,04	0,42
0050	0,50	280	4060	240	3480	8000	0,75	4	0,06	0,08	
0075	0,75	250	3625	210	3045	8000	1,12	6	0,10	0,12	
0100	1	250	3625	210	3045	8000	1,50	8	0,14	0,16	0,45
0125	1,25	200	2900	170	2465	6000	1,87	7,5	0,17	0,20	
0150	1,50	150	2175	125	1812	6000	2,25	9	0,22	0,24	
0200	2	125	1812	105	1523	5000	3	10	0,30	0,32	0,45

Performances and Output Curves. (Thanks to contact us)
(Tests effected with Oil SHELL Tellus T 46)

Dimension readings and approximative characteristics subject to modifications .

The pump can only run in one way rotation (Precise the direction of rotation on order) .

The working cycles hereunder are possible with hydraulic mineral oil for viscosities between 12 and 150 cSt (65,2 and 700 SUS) .

The minimum viscosity of 12 cSt (65,2 SUS) is available for a maximum temperature in the hydraulic circuit .

Working temperature : - 20 °C (4 °F) to + 80 °C (176 °F) (140 °C (284 °F) with Viton shaft seal) .

Full flow filtration : 10 to 15 microns at the pressure port of the pump or on the return circuit .
Filtration on the suction side : 125 microns .

Pressure at the inlet of the pump :
- Minimum 0,8 bar absolute (Maxi depressure 200 millibar with regard to the air pressure) .
- Maximum 1,2 bar absolute or 0,2 bar over the air pressure .

The hereabove characteristics concern the pumps driven by elastic couplings perfectly aligned without any external radial or axial force .

For any other coupling , see technical data sheet F.T R 0009 .

For use at maximum working conditions and/or intensive cycles, thanks to consult our technical sales service for validation.

TORQUE CALCULATION

Q Capacity in cc / rev

P Pressure in bar

η_m Mechanical efficiency (see catalogue C10)

calculation of the torque : $\frac{1,56 \times Q \times P}{1000 \times \eta_m} = C$ (m.daN)

Example : P 1 AAN 0100 F L 20 B01

Pressure : 200 bar
Speed : 1000 RPM

Torque $= \frac{1,56 \times 1 \times 200}{1000 \times 0,98}$ = 0,34 m.daN

F.T R 0220

" BASIC " CATALOGUE MOUNTING POSSIBILITIES

FRONT BODIES (III - IV Sign)		CENTRAL BODIES (VII Sign)	REAR BODY (VIII Sign)	TYPE and SHAFT CODE (IX - X - XI Sign)			
A	D	F	L	10	20	30	40
AAN					20B01		40C01

Not feasible versions in " BASIC "

Other possibilities : please refer to " GENERAL " catalogue G10

Our " BASIC " catalogue includes versions of our series 0 to 5 pumps according to european and american Standards (SAE)

Dimension readings and approximative characteristics subject to modifications .

F.T R 0229

HYDRAULIC GEAR PUMPS SERIES 0

PUBLISHING 05 / 07 / 2000

P	II Sign	AA	N	0	VI Sign	F	L	IX Sign	IX Sign	XI Sign	XII Sign

For CODIFICATION , see data sheet F.T R 0149

N : Nitrile
V : Viton

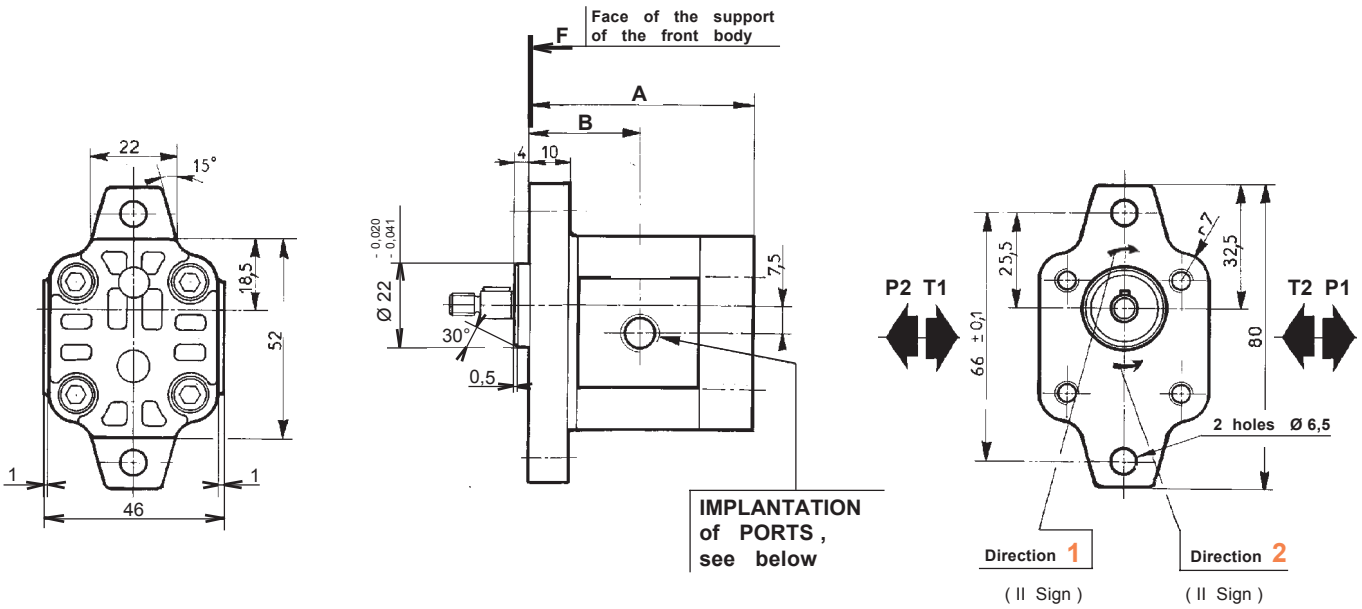

Dimension readings and approximative characteristics subject to modifications .

CHOICE of the Capacity (VI Sign)	Dimensions A	Dimensions B
025 050 075	52,6	25,2
100 125 150	59	28,4
200	67,5	32,6

CHOICE of DRIVING SHAFTS

20 (IX - X Sign)
B01 (XI Sign)

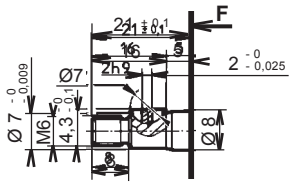

Maxi transmissible torque
0,5 m.daN

40 (IX - X Sign)
C01 (XI Sign)

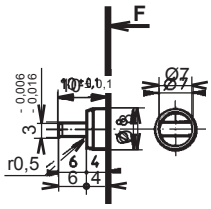

Maxi transmissible torque
0,6 m.daN

IMPLANTATION of PORTS (VII Sign)	Capacity (VI Sign)	INLET (T) Ø C	INLET (T) D	OUTLET (P) Ø C	OUTLET (P) D
F (Threaded) Ø C effective depth D	025 to 200	M 14 x 150	12	M 14 x 150	12

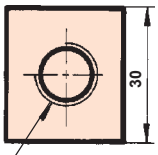

F.T 00 289

HYDRAULIC GEAR PUMPS SERIES **0** TYPE **AAN**

PUBLISHING 05 / 07 / 2000

Home - general contents

Basic catalogue contents

CATALOGUE BASIC (B10)

Hydraulic gear pumps

Series 1

PUMPS CHARACTERISTICS

MOUNTING POSSIBILITIES

PUMPS TYPE : BAN
CBN

MULTIBODIED PUMPS

Edition 01 / 2003

B10 | 024 | 00

MAX. WORKING CONDITIONS

MODEL (V-VI Sign)	Capacity	PEAK PRESSURE		MAX. WORKING PRESSURE		Maxi Speed	NOMINAL FLOW		Input power (kW) at 1000 RPM and 100 bar	Input torque at 100 bar and m.daN	Approximate weight
							at 1500 RPM	at Maxi Speed			
	cc / rev	bar	PSI	bar	PSI	RPM	l / min	l / min			Kg
1001	1,02	300	4350	255	3700	8000	1,53	8,16	0,18	0,16	0,9
1002	2,05	300	4350	255	3700	8000	3,07	16,4	0,36	0,32	
1003	3,07	300	4350	255	3700	7000	4,60	21,4	0,55	0,49	
1004	4,09	250	3625	215	3120	6000	6,13	24,5	0,70	0,65	1,1
1005	5,12	200	2900	170	2465	6000	7,68	30,7	0,88	0,81	
1006	6,14	150	2175	125	1812	6000	9,21	30,7	1,03	0,98	

Performances and Output Curves. (Thanks to contact us)
(Tests effected with Oil SHELL Tellus T 46)

Dimension readings and approximative characteristics subject to modifications .

The pump can only run in one way rotation (Precise the direction of rotation on order) .

The working cycles hereunder are possible with hydraulic mineral oil for viscosities between 12 and 150 cSt (65,2 and 700 SUS) .

The minimum viscosity of 12 cSt (65,2 SUS) is available for a maximum temperature in the hydraulic circuit .

Working temperature : - 20 °C (4 °F) to + 80 °C (176 °F) (140 °C (284 °F) with Viton shaft seal) .

Full flow filtration : 10 to 15 microns at the pressure port of the pump or on the return circuit .
Filtration on the suction side : 125 microns .

Pressure at the inlet of the pump :
- Minimum 0,7 bar absolute (Maxi depressure 300 millibar with regard to the air pressure) .
- Maximum 2 bar absolute or 1 bar over the air pressure .

The hereabove characteristics concern the pumps driven by elastic couplings perfectly aligned without any external radial or axial force .

For any other coupling , see technical data sheet F.T R 0009 .

For use at maximum working conditions and/or intensive cycles, thanks to consult our technical sales service for validation.

TORQUE CALCULATION

Q Capacity in cc / rev
P Pressure in bar
ηm Mechanical efficiency (see catalogue C10)

Calculation of the torque : $\frac{1,56 \times Q \times P}{1000 \times \eta m} = C$ (m.daN)

Example : P 1 BAN 1006 C L 10 B01 Pressure : 175 bar
Speed : 1500 RPM

Torque = $\frac{1,56 \times 6 \times 175}{1000 \times 0,85}$ = 1,93 m.daN

F.T R 0221

" BASIC " CATALOGUE MOUNTING POSSIBILITIES

FRONT BODIES (III - IV Sign)			CENTRAL BODIES (VII Sign)			REAR BODY (VIII Sign)	TYPE and SHAFT CODE (IX - X - XI Sign)			
A	B	C	H	C	F	L	10	20	30	40
	BAN						10B01			
		CBN					10B01	20C01		40C02

Not feasible versions in " BASIC "

Other possibilities : please refer to " GENERAL " catalogue G10

Our " BASIC " catalogue includes versions of our series 0 to 5 pumps according to european and american Standards (SAE)

Dimension readings and approximative characteristics subject to modifications .

F.T R 0230

HYDRAULIC GEAR PUMPS SERIES 1

PUBLISHING 05 / 07 / 2000

P	II Sign	BA	N	1	VI Sign	VII Sign	L	1	0	B01	XII Sign

For CODIFICATION , see data sheet F.T R 0149

N : Nitrile
V : Viton

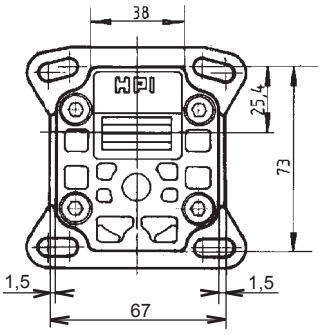

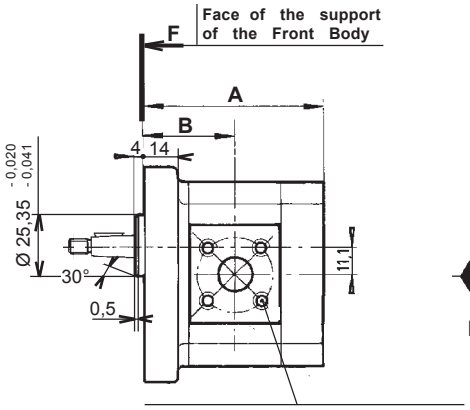

CHOICE of IMPLANTATIONS of PORTS, see below

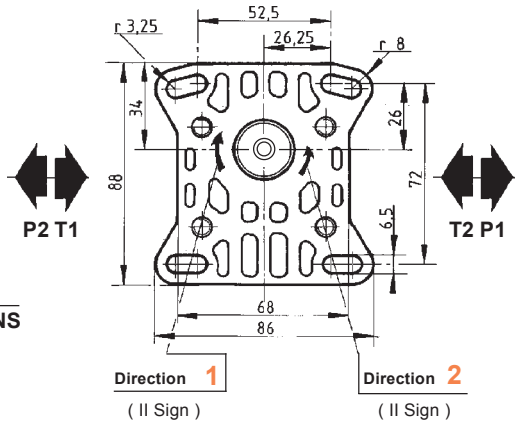

CHOICE of the capacity (VI Sign)	Dimensions A	Dimensions B
001 002 003	71,8	35,9
004 005 006	81,5	40,7

DRIVING SHAFTS

10 (IX - X Sign)
B01 (XI Sign)

Taper 1 / 8

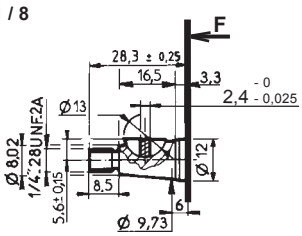

Delivered with Nut

Ref. : 101 719

Maxi transmissible torque

4 m.daN

Multiple geared pumps , see data sheet F.T 10 347

Dimension readings and approximative characteristics subject to modifications .

CHOICE of IMPLANTATIONS of PORTS (VII Sign)	Capacity (VI Sign)	INLET (T) ØC	INLET (T) D	INLET (T) E	OUTLET (P) ØC	OUTLET (P) D	OUTLET (P) E	CATALOGUE N° 70 Ref. of RECOMMENDED FLANGES (for speed 1500 rev / min)	INLET (T)	OUTLET (P)
C (Square) 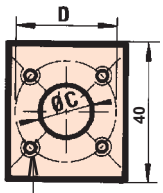 M6 effective depth 13	001 to 006	14	30		14	30		1001 to 1003	1 / 4 " BSP N: 1.505878 V: 1.505879	1 / 4 " BSP N: 1.505878 V: 1.505879
								1004 to 1006	3 / 8 " BSP N: 1.500293 V: 1.505027	1 / 4 " BSP N: 1.505878 V: 1.505879
F (Threaded) 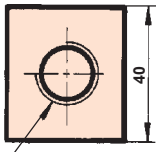 ØC effective depth D	001 to 003	3/8 " BSP	12		3/8 " BSP	12		1001 to 1003		
	004 to 006	1/2 " BSP	14		3/8 " BSP	12		1004 to 1006		

F.T 10 290

HYDRAULIC GEAR PUMPS SERIES 1 TYPE BAN

PUBLISHING 05 / 07 / 2000

P	II Sign	CB	N	1	VI Sign	VII Sign	L	IX Sign	X Sign	XI Sign	XII Sign

For CODIFICATION , see data sheet F.T R 0149

N : Nitrile
V : Viton

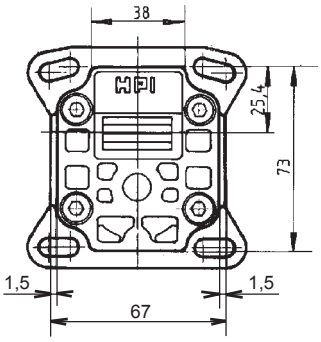

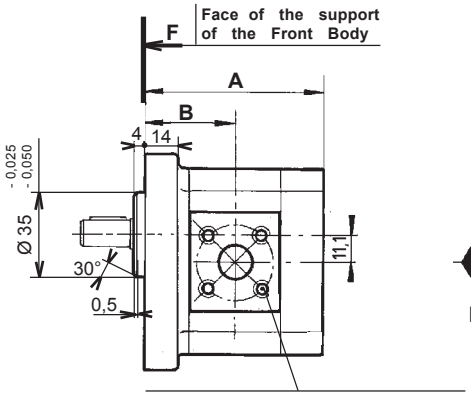

CHOICE of IMPLANTATIONS of PORTS, see below

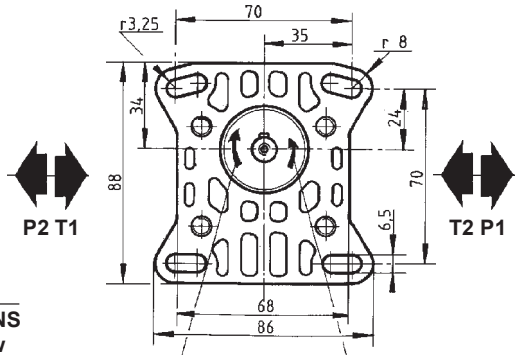

Direction 1 (II Sign)
Direction 2 (II Sign)

CHOICE of the capacity (VI Sign)	Dimensions A	Dimensions B
001 002 003	71,8	35,9
004 005 006	81,5	40,7

Dimension readings and approximative characteristics subject to modifications .

Multiple geared pumps , see data sheet F.T 10 347

CHOICE of DRIVING SHAFTS

10 (IX - X Sign) **B01** (XI Sign)

Taper 1 / 8

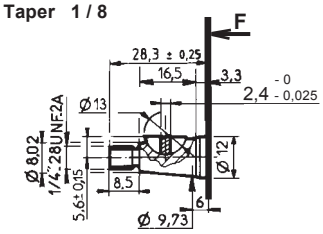

Delivered with Nut

Ref. : 101 719

Maxi transmissible torque **4** m.daN

20 (IX - X Sign) **C01** (XI Sign)

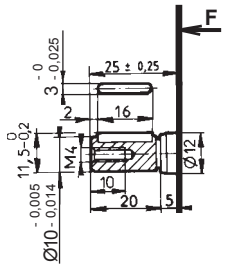

Maxi transmissible torque **2,5** m.daN

40 (IX - X Sign) **C02** (XI Sign)

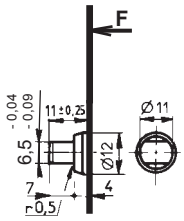

Maxi transmissible torque **3** m.daN

CHOICE of IMPLANTATIONS of PORTS

(VII Sign)

C (Square)

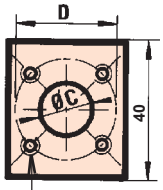

M6
effective depth 13

F (Threaded)

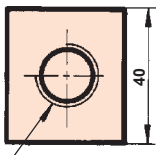

ØC
effective depth D

Capacity (VI Sign)	INLET (T) ØC	INLET (T) D	INLET (T) E	OUTLET (P) ØC	OUTLET (P) D	OUTLET (P) E
001 à 006	14	30		14	30	
001 to 003	3/8 " BSP	12		3/8 " BSP	12	
004 to 006	1/2 " BSP	14		3/8 " BSP	12	

CATALOGUE N° 70
Ref. of RECOMMENDED FLANGES (for speed 1500 rev / min)

	INLET (T)	OUTLET (P)
1001 to 1003	1 / 4 " BSP N: 1.505878 V: 1.504770	1 / 4 " BSP N: 1.505878 V: 1.504770
1004 to 1006	3 / 8 " BSP N: 1.500293 V: 1.505027	1 / 4 " BSP N: 1.505878 V: 1.504770
1001 to 1003		
1004 to 1006		

F.T 10 291

HYDRAULIC GEAR PUMPS SERIES 1 TYPE CBN

PUBLISHING 05 / 07 / 2000

P	II Sign	III Sign	IV Sign	1	VI Sign	C	A	1	X Sign	C	L	XIII Sign	XIV Sign	XV Sign	XVI Sign

For CODIFICATION , see data sheet F.T R 0150

N : Nitrile
V : Viton

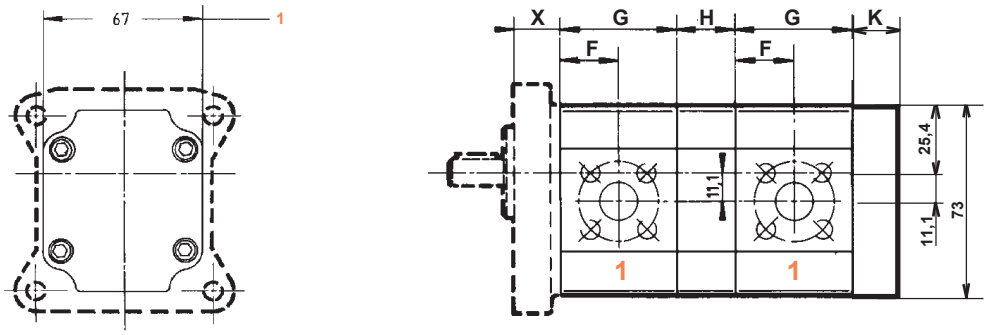

- Hydraulic characteristics ,
- driving shafts ,
- Supply ports implantation (only for Codes C and F),
- Dimensions of the " Front bodies " : see the technical data sheets of the single quoted below .

JUNCTION BODY

Code A (VIII Sign)

Common suction ports
(Capacity of the pump without suction ≥ to the half of the capacity of the first stage pump)

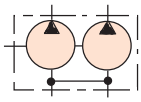

Front bodies Types (III - IV Sign)	Dimensions X	data sheets references
BAN	18	F.T 10 290
CBN	18	F.T 10 291

ATTENTION

For common suctions .

The flow of the pump , or pumps preceding or following the section including the suction must not exceed **12 l / min .**

SERIE (V - IX Sign)	Capacity (VI - X Sign)	F	G	H	K
1	001 to 003	17,9	35,8	23	18
	004 to 006	22,7	45,6		

TORQUE CALCULATION

Q Capacity in cc / rev

P Pressure in bar

ηm Mechanical efficiency (see catalogue C10)

Calculation of the torque for one pump body : $\frac{1,56 \times Q \times P}{1000 \times \eta m} = C$ (m.daN)

Example : P 1 CBN 1006 C A 1004 H L 20 C01 Pressure : 1006 : 175 bar 1004 : 150 bar Speed : 1000 RPM

$\frac{1,56 \times 6 \times 175}{1000 \times 0,87} = 1,88$ m.daN

$\frac{1,56 \times 4 \times 150}{1000 \times 0,87} = 1,07$ m.daN

= **2,95 m.daN** ⟹ Total torque

Dimension readings and approximative characteristics subject to modifications .

F.T 10 347

MULTIPLE GEARED PUMPS SERIE **1**

Home - general contents

Basic catalogue contents

CATALOGUE BASIC (B10)

Hydraulic gear pumps

Series 2

Flat Front Body

PUMPS CHARACTERISTICS

MOUNTING POSSIBILITIES

PUMPS TYPE : AAN
BAN
DBN
DCN
DUK

MULTIBODIED PUMPS

Edition 01 / 2003

B10 | 034 | 00

PUMPS CHARACTERISTICS

MODEL (V-VI Sign)	Capacity	PEAK PRESSURE		MAX. WORKING PRESSURE		Maxi Speed	NOMINAL FLOW		Input power (kW) at 1000 RPM and 100 bar	Input torque at 100 bar and m.daN	Approximate weight
							at 1500 RPM	at Maxi Speed			
	cc / rev	bar	PSI	bar	PSI	RPM	l / min	l / min			Kg
2004	4,65	280	4060	240	3480	3500	6,97	16,2	0,92	0,78	1,6
2006	6,45	280	4060	240	3480	3500	9,67	22,5	1,27	1,15	
2008	8,25	280	4060	240	3480	3500	12,37	28,8	1,62	1,52	1,7
2010	10,12	280	4060	240	3480	3500	15,18	35,3	1,95	1,88	
2012	12	280	4060	240	3480	3500	18	42	2,31	2,25	
* 2014	15,52	250	3625	210	3045	3500	20,7	48,3	2,73	2,62	2,1
2015	15,52	250	3625	210	3045	3500	23,25	52,5	2,94	2,77	2,1
2018	19,12	200	2900	170	2465	3500	28,65	66,8	3,63	3,32	2,2
2022	22,87	175	2537	150	2175	3500	34,2	79,8	4,30	4,02	2,3
2026	27,6	175	2537	150	2175	3000	41,4	82,8	5,16	4,74	2,7
2030	31,2	175	2537	150	2175	3000	46,8	93,6	5,77	5,40	2,8

* **REWINDER:** The 2014 pumps can be manufactured only with shafts of 10 B02 - 10 C02 - 30 A0 - 30 D01 Type.

Performances and Output Curves. (Thanks to contact us)

(Tests effected with Oil SHELL Tellus T 46)

The pump can only run in one way rotation (Precise the direction of rotation on order).

The working cycles hereunder are possible with hydraulic mineral oil for viscosities between 12 and 150 cSt (65,2 and 700 SUS) .

The minimum viscosity of 12 cSt (65,2 SUS) is available for a maximum temperature in the hydraulic circuit.

Working temperature : - 20 °C (4 °F) to + 80 °C (176 °F) (140 °C (284 °F) with Viton shaft seal).

Full flow filtration : 10 to 15 microns at the pressure port of the pump or on the return circuit.
Filtration on the suction side : 125 microns.

Pressure at the inlet of the pump :
- Minimum 0,7 bar absolute (Maxi depressure 300 millibar with regard to the air pressure).
- Maximum 2 bar absolute or 1 bar over the air pressure.

The hereabove characteristics concern the pumps driven by elastic couplings perfectly aligned without any external radial or axial force.

For any other coupling, see technical data sheet F.T R 0009.

For use at maximum working conditions and/or intensive cycles, thanks to consult our technical sales service for validation.

TORQUE CALCULATION

Q Capacity in cc / rev

P Pressure in bar

ηm Mechanical efficiency (see catalogue C10)

Calculation of the torque : $\frac{1,56 \times Q \times P}{1000 \times \eta m} = C$ (m.daN)

Example : P 1 AAN 2015 H L 30 A01

Pressure : 200 bar
Speed : 1500 RPM

Torque $= \frac{1,56 \times 15 \times 200}{1000 \times 0,87}$ = 5,38 m.daN

Dimension readings and approximative characteristics subject to modifications.

F.T R 0222

" BASIC " CATALOGUE MOUNTING POSSIBILITIES

FRONT BODIES (III - IV Sign)				CENTRAL BODIES (VII Sign)				REAR BODY (VIII Sign)	TYPE and SHAFT CODE (IX - X - XI Sign)			
A	B	C	D	H	C	F	B	L	10	20	30	40
AAN										20A01 20C02	30A01	40C03
	BAN								10B02	20C02 20C18 *		
			DBN						10C02		30D01	
			DCN						10C02		30D01	
			DUK									40D02

* Shaft 20 C 18 Capacities 2004 to 2012 only.

Capacities 2004 to 2022 only

Not feasible versions in " BASIC "

Other possibilities : please refer to " GENERAL " catalogue G10

Our " BASIC " catalogue includes versions of our series 0 to 5 pumps according to european and american Standards (SAE)

Dimension readings and approximative characteristics subject to modifications .

F.T R 0231

HYDRAULIC GEAR PUMPS

SERIES 2 (FLAT FRONT BODY)

PUBLISHING 06 / 02 / 2002

P	II Sign	AA	N	2	VI Sign	H	L	IX Sign	X Sign	XI Sign	XII Sign

For CODIFICATION , see data sheet F.T R 0149

N : Nitrile
V : Viton

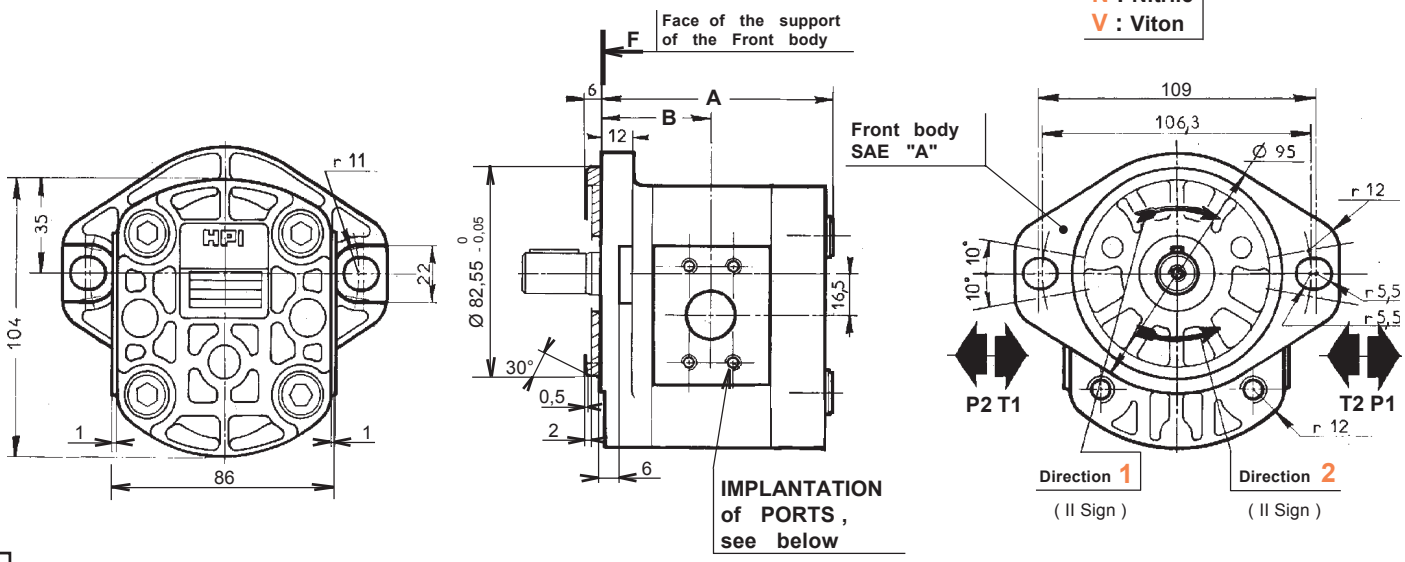

CHOICE of DRIVING SHAFTS

20 (IX - X Sign) **C02** (XI Sign)

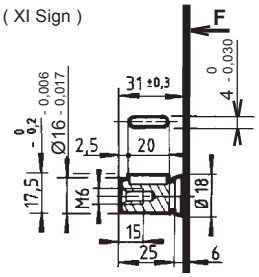

Maxi transmissible torque
5 m.daN

20 (IX - X Sign) **A01** (XI Sign)

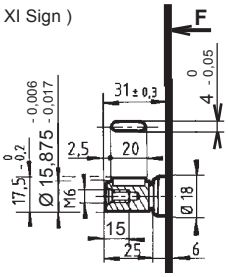

Maxi transmissible torque
5 m.daN

30 (IX - X Sign) **A01** (XI Sign)

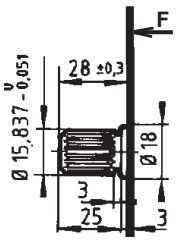

Involute spline to SAE "A"
Standard - 9 theet -
Pitch 16/32 - Flat root
30° Pressure angle

Maxi transmissible torque
10 m.daN

40 (IX - X Sign) **C03** (XI Sign)

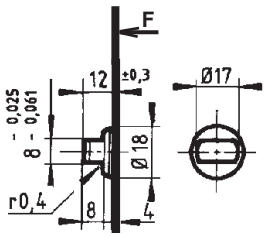

Maxi transmissible torque
7 m.daN

CHOICE of the CAPACITY (VI Sign)	Dimensions A	Dimensions B
004 - 006 - 008 - 010 - 012	92,5	43,5
014 - 015 - 018 - 022	107	51
026 - 030	123	59

Multiple geared pumps , see data sheet F.T 20 348

NOTA: The 2014 pumps can be manufactured only with shaft 30 A01 Typ.

IMPLANTATION of PORTS (VII Sign)	Capacity (VI Sign)	INLET (T) ØC	INLET (T) D	INLET (T) E	OUTLET (P) ØC	OUTLET (P) D	OUTLET (P) E	CATALOGUE N° 70 Ref. of RECOMMENDED FLANGES (for speed 1500 rev / min) INLET (T)	OUTLET (P)
H (HPI) M6 effective depth 12	004 to 012	20	17,4	38	15	17,4	38	1 / 2 " BSP N: 2.500055 V: 2.504126	3 / 8 " BSP N: 2.500054 V: 2.504994
	014 to 030	26	47,6	22,4	15	17,4	38	1 " BSP N: 2.500496 V: 2.504117	1 / 2 " BSP N: 2.500055 V: 2.504126

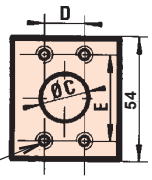

Dimension readings and approximative characteristics subject to modifications .

F.T 20 292

HYDRAULIC GEAR PUMPS SERIES **2** TYPE **AAN**

PUBLISHING 06 / 02 / 2002

P	II Sign	AA	N	2	VI Sign	C	L	IX Sign	X Sign	XI Sign	XII Sign

For CODIFICATION , see data sheet F.T R 0149

N : Nitrile
V : Viton

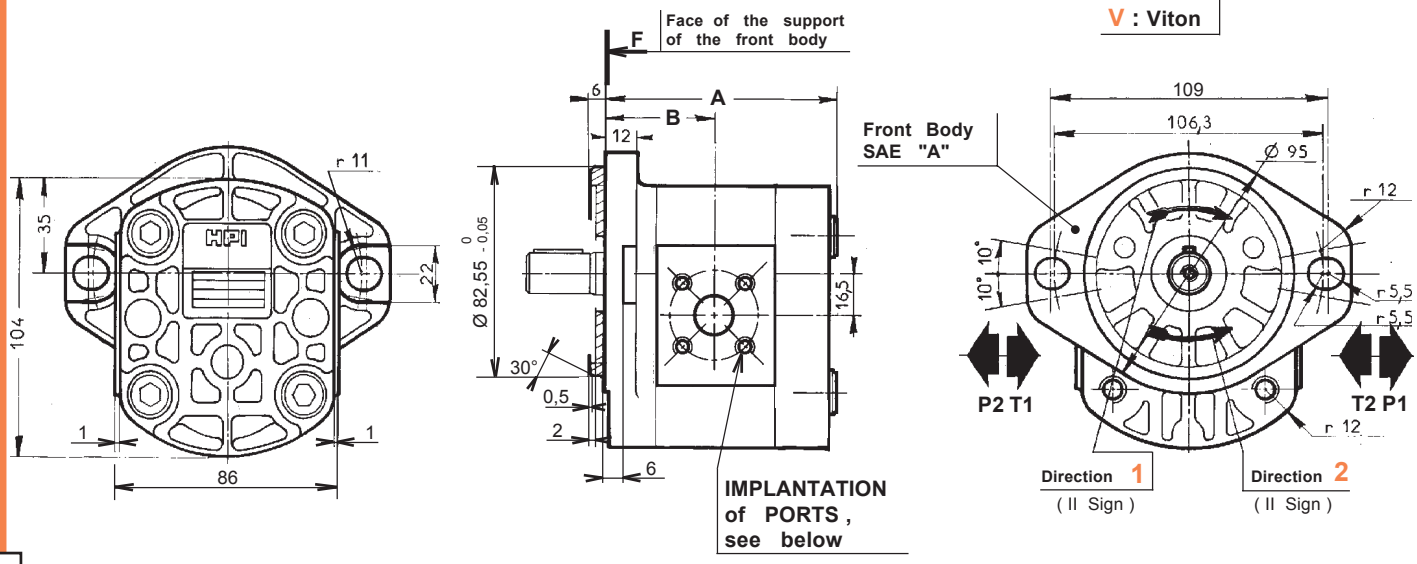

CHOICE of DRIVING SHAFTS

20 (IX - X Sign)
C02 (XI Sign)

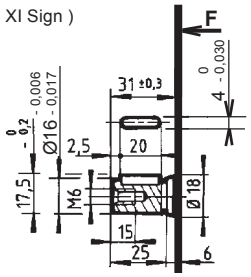

Maxi transmissible torque
5 m.daN

20 (IX - X Sign)
A01 (XI Sign)

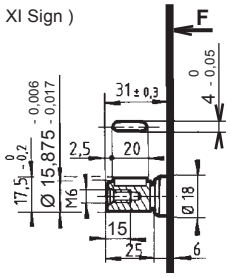

Maxi transmissible torque
5 m.daN

30 (IX - X Sign)
A01 (XI Sign)

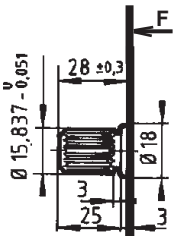

Involute spline to SAE "A"
Standard - 9 theet -
Pitch 16/32 - Flat root
30° Pressure angle

Maxi transmissible torque
10 m.daN

40 (IX - X Sign)
C03 (XI Sign)

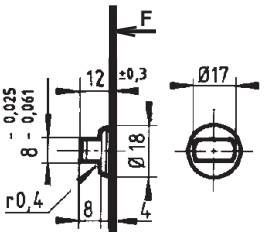

Maxi transmissible torque
7 m.daN

CHOICE of the CAPACITY (VI Sign)	Dimensions A	Dimensions B
004 - 006 - 008 - 010 - 012	92,5	43,5
014 - 015 - 018 - 022	107	51
026 - 030	123	59

Multiple geared pumps , see data sheet F.T 20 348

NOTA: The 2014 pumps can be manufactured only with shaft 30 A01 Typ.

IMPLANTATION of PORTS (VII Sign)	Capacity (VI Sign)	INLET (T) ØC	INLET (T) D	INLET (T) E	OUTLET (P) ØC	OUTLET (P) D	OUTLET (P) E	CATALOGUE N° 70 Ref. of RECOMMENDED FLANGES (for speed 1500 rev / min) INLET (T)	OUTLET (P)
C (Square) M6 effective depth 12	004 to 012	20	40		15	35		1 / 2 " BSP N: 367141.502	3 / 8 " BSP N: 367141.702
	014 to 030							3 / 4 " BSP N: 367141.503	1 / 2 " BSP N: 367141.703

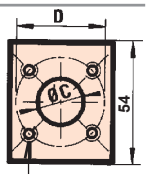

Dimension readings and approximative characteristics subject to modifications .

F.T 20 214

HYDRAULIC GEAR PUMPS SERIES 2 TYPE AAN

PUBLISHING 06 / 02 / 2002

P	II Sign	AA	N	2	VI Sign	F	L	IX Sign	X Sign	XI Sign	XII Sign

For CODIFICATION , see data sheet F.T R 0149

N : Nitrile
V : Viton

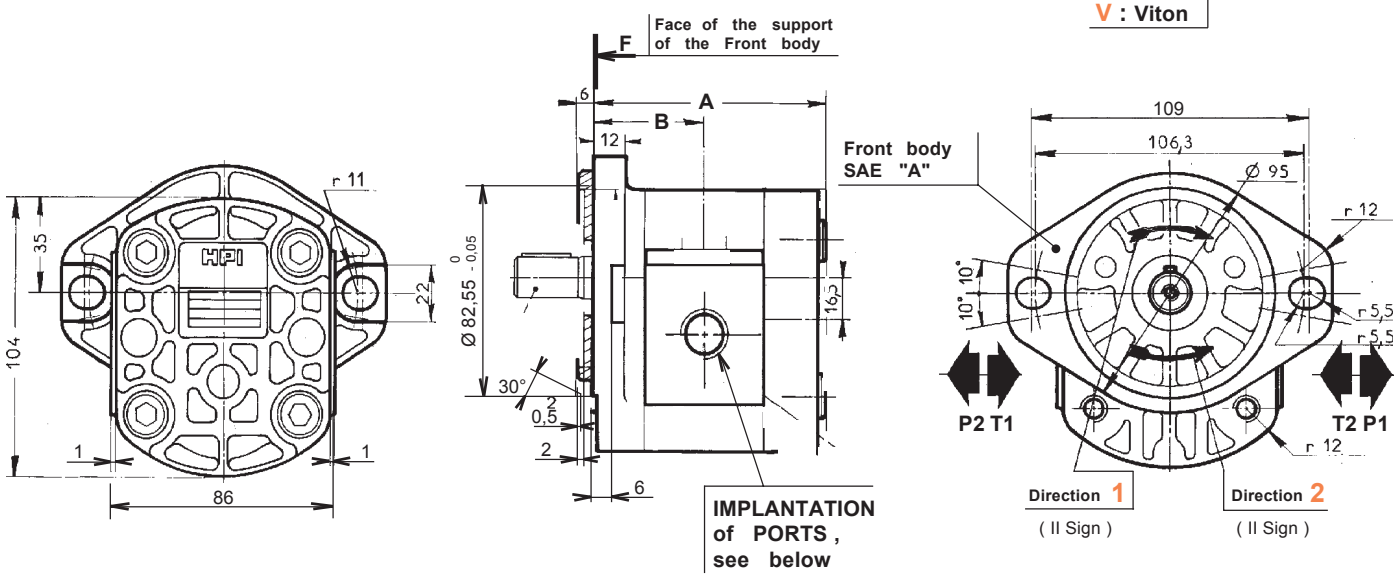

CHOICE of DRIVING SHAFTS

20 (IX - X Sign) **C02** (XI Sign)

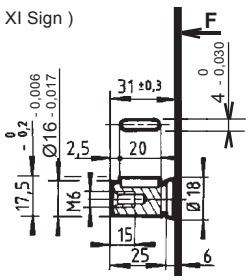

Maxi transmissible torque
5 m.daN

20 (IX - X Sign) **A01** (XI Sign)

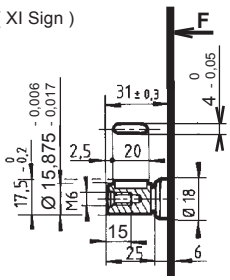

Maxi transmissible torque
5 m.daN

30 (IX - X Sign) **A01** (XI Sign)

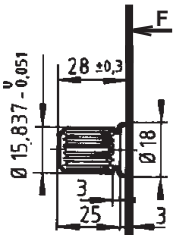

Involute spline to SAE "A"
Standard - 9 theet -
Pitch 16/32 - Flat root
30° Pressure angle

Maxi transmissible torque
10 m.daN

40 (IX - X Sign) **C03** (XI Sign)

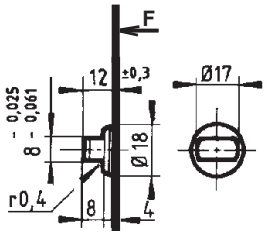

Maxi transmissible torque
7 m.daN

CHOICE of the CAPACITY (VI Sign)	Dimensions A	Dimensions B
004 - 006 - 008 - 010 - 012	92,5	43,5
014 - 015 - 018 - 022	107	51

Multiple geared pumps , see data sheet F.T 20 348

NOTA: The 2014 pumps can be manufactured only with shaft 30 A01 Typ.

IMPLANTATION of PORTS (VII Sign)	Capacity (VI Sign)	INLET (T) ØC	INLET (T) D	INLET (T) E	OUTLET (P) ØC	OUTLET (P) D	OUTLET (P) E	CATALOGUE N° 70 Ref. of RECOMMENDED FLANGES (for speed 1500 rev / min) INLET (T)	OUTLET (P)
F (Threaded) ØC effective depth D	004 to 012	3/4" BSP	16		3/8" BSP	12			
	014 to 022	1" BSP	18		1/2" BSP	14			

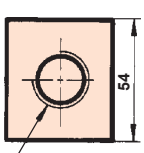

Dimension readings and approximative characteristics subject to modifications .

F.T 20 215

HYDRAULIC GEAR PUMPS SERIES 2 TYPE AAN

PUBLISHING 06 / 02 / 2002

P	II Sign	BA	N	2	VI Sign	VII Sign	L	IX Sign	X Sign	XI Sign	XII Sign

For CODIFICATION , see data sheet F.T R 0149

N : Nitrile
V : Viton

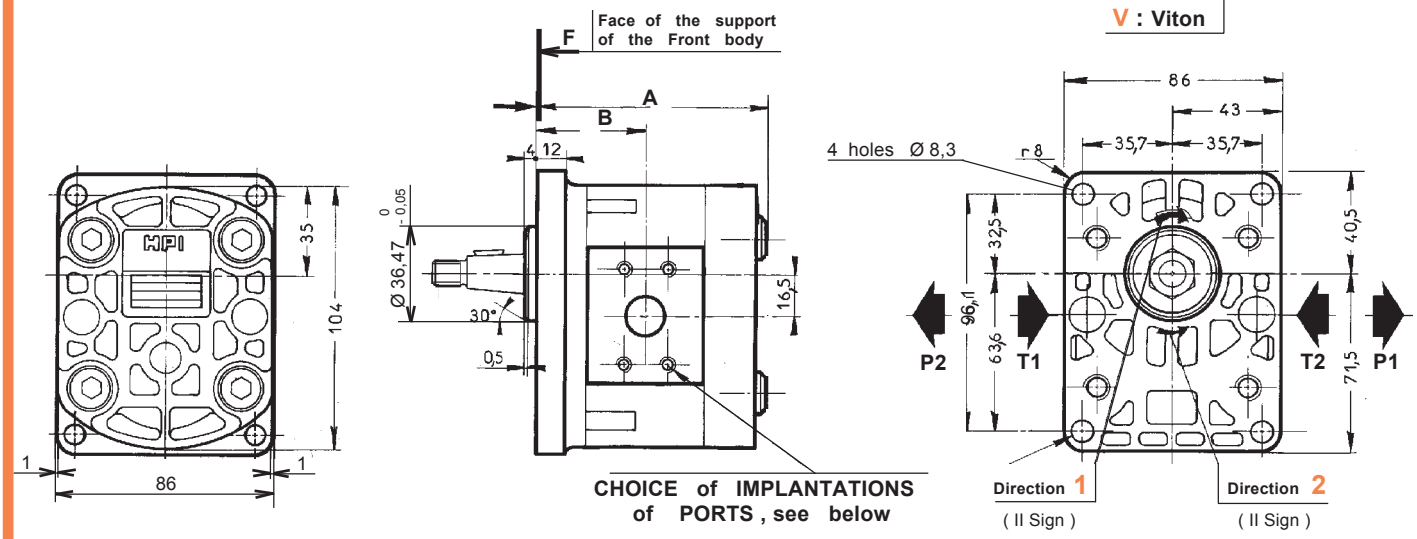

CHOICE of IMPLANTATIONS of PORTS , see below

Dimension readings and approximative characteristics subject to modifications .

CHOICE of the CAPACITY (VI Sign)	Dimensions A	Dimensions B
004 006 008 010 012	92,5	43,5
014 015 018 022	107	51
026 030	121	57

Multiple geared pumps, see data sheet F.T 20 348

CHOICE of DRIVING SHAFTS

10 (IX - X Sign) **B02** (XI Sign)

Taper 1 / 8

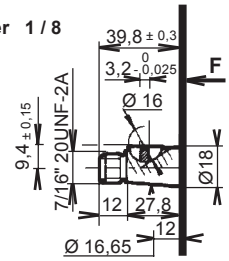

Delivered with Nut : 100 841

Maxi transmissible torque **25** m.daN

20 (IX - X Sign) **C02** (XI Sign)

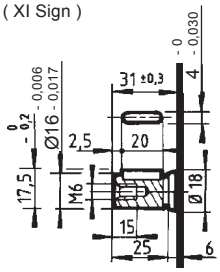

Maxi transmissible torque **5** m.daN

20 (IX - X Sign) **C18*** (XI Sign)

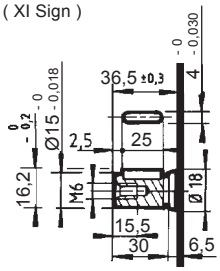

Maxi transmissible torque **4** m.daN

* 2004 to 2012 ONLY
2004 to 2008 280 bar Maxi
2010 250 bar Maxi
2012 210 bar Maxi

NOTA: The 2014 pumps can be manufactured only with shaft 10 B02 Typ.

CHOICE of IMPLANTATIONS of PORTS (VII Sign)	Capacity (VI Sign)	INLET (T) ØC	INLET (T) D	INLET (T) E	OUTLET (P) ØC	OUTLET (P) D	OUTLET (P) E	CATALOGUE N° 70 Ref. of RECOMMENDED FLANGES (for speed 1500 rev / min) INLET (T)	OUTLET (P)
H (HPI) M6 effective depth 12 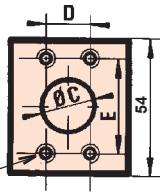	004 to 012	20	17,4	38	15	17,4	38	1 / 2 " BSP N: 2.500055 V: 2.504126	3 / 8 " BSP N: 2.500054 V: 2.504994
	014 to 030	26	47,6	22,4	15	17,4	38	1 " BSP N: 2.500496 V: 2.504117	1 / 2 " BSP N: 2.500055 V: 2.504126
C (Square) M6 effective depth 12 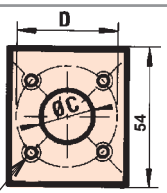	004 to 012	20	40		15	35		1 / 2 " BSP N: 367141.502	3 / 8 " BSP N: 367141.702
	014 to 030							3 / 4 " BSP N: 367141.503	1 / 2 " BSP N: 367141.703

F.T 20 293

HYDRAULIC GEAR PUMPS SERIES 2 TYPE BAN

PUBLISHING 06 / 02 / 2002

P	II Sign	BA	N	2	VI Sign	VII Sign	L	IX Sign	X Sign	XI Sign	XII Sign

For CODIFICATION , see data sheet F.T R 0149

N : Nitrile
V : Viton

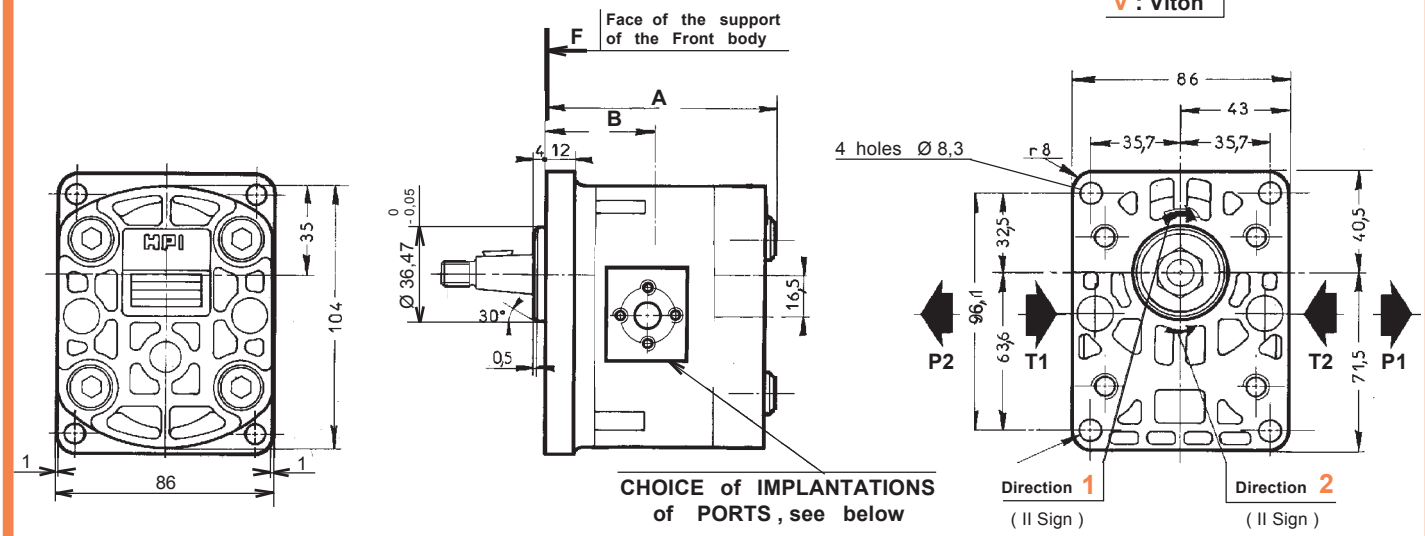

CHOICE of IMPLANTATIONS of PORTS , see below

Dimension readings and approximative characteristics subject to modifications .

CHOICE of the CAPACITY (VI Sign)	Dimensions A	Dimensions B
004 006 008 010 012	92,5	43,5
014 015 018 022	107	51
026 030	121	57

Multiple geared pumps, see data sheet F.T 20 348

CHOICE of DRIVING SHAFTS

10 (IX - X Sign)
B02 (XI Sign)

Taper 1 / 8

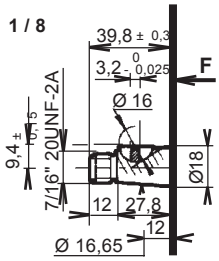

Delivered with Nut : 100 841

Maxi transmissible torque
25 m.daN

20 (IX - X Sign)
C02 (XI Sign)

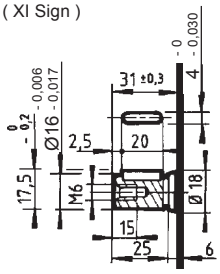

Maxi transmissible torque
5 m.daN

20 (IX - X Sign)
C18* (XI Sign)

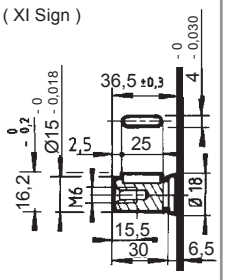

Maxi transmissible torque
4 m.daN

* 2004 to 2012 ONLY
2004 to 2008 280 bar Maxi
2010 250 bar Maxi
2012 210 bar Maxi

NOTA: The 2014 pumps can be manufactured only with shaft 10 B02 Typ.

CHOICE of IMPLANTATIONS of PORTS (VII Sign)	Capacity (VI Sign)	INLET (T) ØC	D	E	ØF	G	OUTLET (P) ØC	D	E	ØF	G	CATALOGUE N° 70 Ref. of RECOMMENDED FLANGES (for speed 1500 rev / min) INLET (T)	OUTLET (P)
F (Threaded) ØC effective depth D 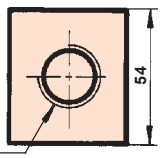	004 to 012	3/4" BSP	16				3/8" BSP	12					
	014 to 022	1" BSP	18				1/2" BSP	14					
B (Italian) Ø F effective depth G 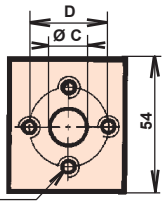	004 to 012	15	30		M6	13	15	30		M6	13	3 / 8 " BSP N: X.367508.201 1 / 2 " BSP N: X.367508.202	3 / 8 " BSP N: X.367508.201 1 / 2 " BSP N: X.367508.202
	014 to 030	20	40		M8	13	15	30		M6	13	1 / 2 " BSP N: X.367508.101 3 / 4 " BSP N: X.367508.102	3 / 8 " BSP N: X.367508.201 1 / 2 " BSP N: X.367508.202

F.T 20 953

HYDRAULIC GEAR PUMPS SERIES **2** TYPE **BAN**

PUBLISHING 06 / 02 / 2002

P	II Sign	DB	N	2	VI Sign	C	L	IX Sign	X Sign	XI Sign	XII Sign

For CODIFICATION , see data sheet F.T R 0149

N : Nitrile
V : Viton

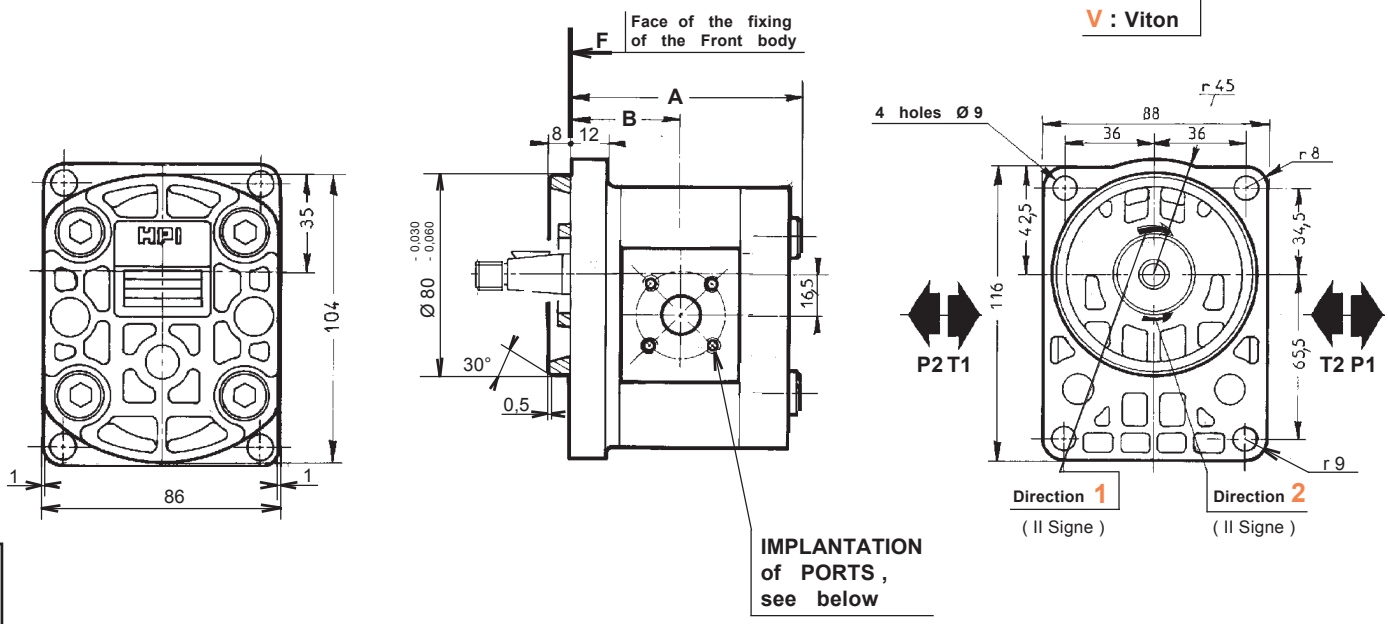

Dimension readings and approximative characteristics subject to modifications .

CHOICE of the CAPACITY (VI Sign)	Dimensions A	Dimensions B
004 006 008 010 012	92,5	43,5
014 015 018 022	107	51
026 030	123	59

Multiple geared pumps , see data sheet F.T 20 348

CHOICE of DRIVING SHAFTS

10 (IX - X Sign)
C02 (XI Sign)

Taper 1 / 5

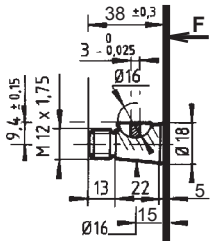

Livré avec écrou

Ref. : 106 317

Maxi transmissible torque
22 m.daN

30 (IX - X Sign)
D01 (XI Sign)

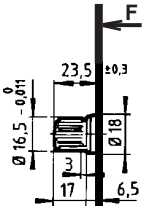

Involute spline shaft
B 17 x 14 - 9 theet -
to norm DIN 5482
Module 1,6
Spigot on free flanks

Maxi transmissible torque
10 m.daN

IMPLANTATION of PORTS (VII Sign)	Capacity (VI Sign)	INLET (T) ØC	INLET (T) D	INLET (T) E	OUTLET (P) ØC	OUTLET (P) D	OUTLET (P) E	CATALOGUE N° 70 Ref. of RECOMMENDED FLANGES (for speed 1500 rev / min) INLET (T)	OUTLET (P)
C (Square) M6 effective depth 12	004 to 012	20	40		15	35		1 / 2 " BSP N: 367141.502	3 / 8 " BSP N: 367141.702
	014 to 030							3 / 4 " BSP N: 367141.503	1 / 2 " BSP N: 367141.703

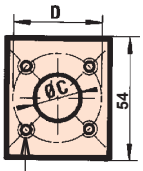

F.T 20 294

HYDRAULIC GEAR PUMPS SERIES 2 TYPE DBN

PUBLISHING 06 / 02 / 2002

P	II Sign	DC	N	2	VI Sign	C	L	IX Sign	X Sign	XI Sign	XII Sign

For CODIFICATION , see data sheet F.T R 0149

N : Nitrile
V : Viton

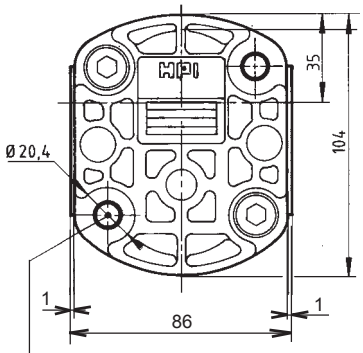

Tightening torque
5 ± 0,2 m.daN

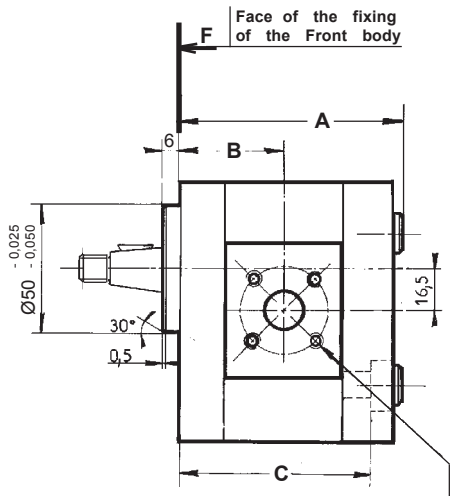

IMPLANTATION of PORTS , see below

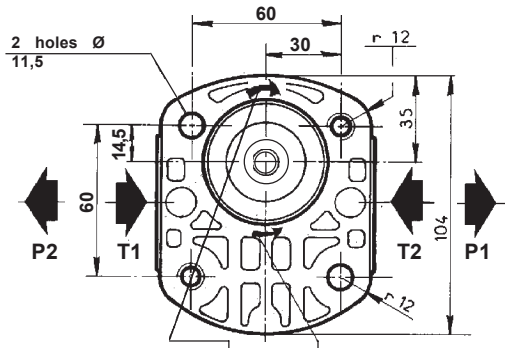

Direction 1 (II Sign)
Direction 2 (II Sign)

Dimension readings and approximative characteristics subject to modifications .

CHOICE of the CAPACITY (VI Sign)	Dimensions A	B	C
004 006 008 010 012	90,5	41,5	79,5
014 015 018 022	105	49	94
026 030	121	57	110

CHOICE of DRIVING SHAFTS

10 (IX - X Sign)
C02 (XI Sign)

Taper 1 / 5

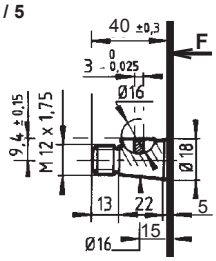

Delivered with Nut

Ref. : 106 317

Maxi transmissible torque
22 m.daN

30 (IX - X Sign)
D01 (XI Sign)

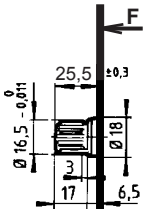

Involute spline shaft
B 17 x 14 - 9 Theet - to norm DIN 5482
Module 1,6
Spigot on free flanks

Maxi transmissible torque
10 m.daN

Capacity (VI Sign)	Assembling recommendation: Screws Dimensions	Screws References	Washers References
004 to 012	M 10 x 100	109 088	101 904
014 to 022	M 10 x 110	109 421	
026 - 030	M 10 x 130	109 004	

Multiple geared pumps , see data sheet F.T 20 348

IMPLANTATION of PORTS (VII Sign)	Capacity (VI Sign)	INLET (T) ØC	D	E	OUTLET (P) ØC	D	E	CATALOGUE N° 70 Ref. of RECOMMENDED FLANGES (for speed 1500 rev / min) INLET (T)	OUTLET (P)
C (Square) M6 effective depth 12	004 to 012	20	40		15	35		1 / 2 " BSP N: 367141.502	3 / 8 " BSP N: 367141.702
	014 to 030							3 / 4 " BSP N: 367141.503	1 / 2 " BSP N: 367141.703

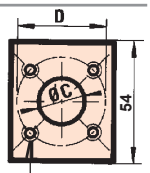

HYDRAULIC GEAR PUMPS SERIES 2 TYPE DCN

PUBLISHING 06 / 02 / 2002

P	II Sign	DU	K	2	VI Sign	C	L	4	0	D02	XII Sign

For CODIFICATION , see data sheet F.T R 0149

N : Nitrile
V : Viton

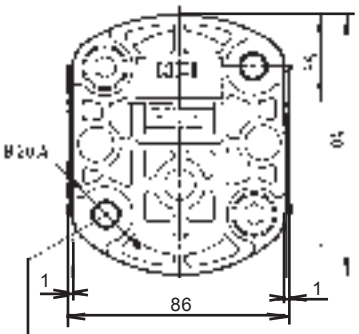

Tightening torque
5 ± 0,2 m.daN

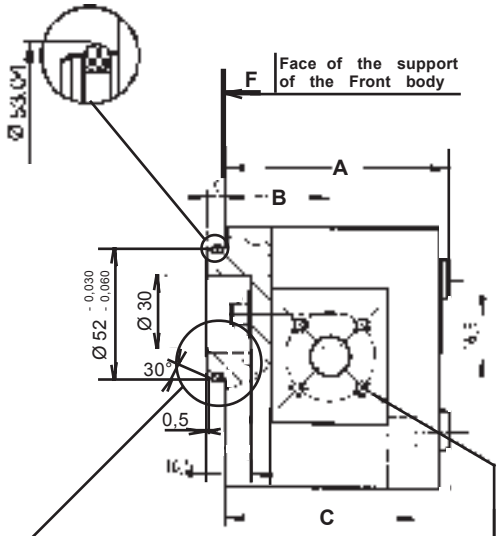

ATTENTION :
Mounting without tightness seal

IMPLANTATION of PORTS , see below

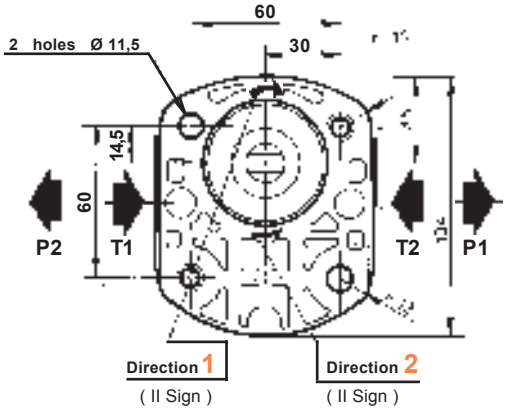

CHOICE of the CAPACITY (VI Sign)	Dimensions A	B	C
004 006 008 010 012	90,5	41,5	79,5
015 018 022	105	49	94
026 030	121	57	110

DRIVING SHAFT

40 (IX - X Sign)
D02 (XI Sign)

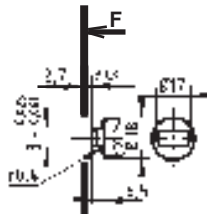

Maxi transmissible torque
7 m.daN

Coupling on request Ref. : 102 947

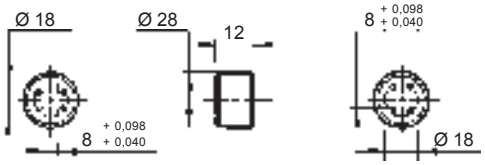

Capacity (VI Sign)			Assembling recommendation Screws Dimensions	Screws References	Washers References
004	to	012	M 10 x 100	109 088	101 904
015	to	022	M 10 x 110	109 421	
026	-	030	M 10 x 130	109 004	

Multiple geared pumps , see data sheet F.T 20 348

IMPLANTATION of PORTS (VII Sign)	Capacity (VI Sign)	INLET (T) ØC	D	E	OUTLET (P) ØC	D	E	CATALOGUE N° 70 Ref. of RECOMMENDED FLANGES (for speed 1500 rev / min) INLET (T)	OUTLET (P)
C (Square) M6 effective depth 12	004 to 012	20	40		15	35		1 / 2 " BSP N: 367141.502	3 / 8 " BSP N: 367141.702
	015 to 030							3 / 4 " BSP N: 367141.503	1 / 2 " BSP N: 367141.703

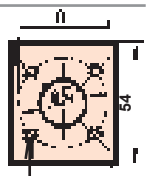

Dimension readings and approximative characteristics subject to modifications .

F.T 20 297

HYDRAULIC GEAR PUMPS SERIES 2 TYPE DUK

PUBLISHING 05 / 07 / 2000

P	II Sign	III Sign	IV Sign	2	VI Sign	VII Sign	A	2	X Sign	XI Sign	L	XIII Sign	XIV Sign	XV Sign	XVI Sign

For CODIFICATION , see data sheet F.T R 0150

N : Nitrile
V : Viton

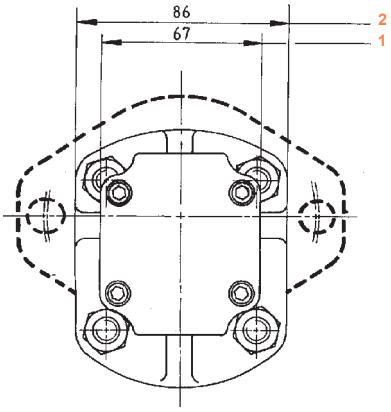

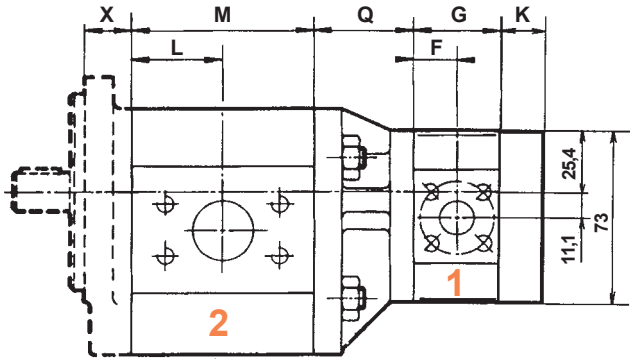

NOTA : The versions 2 / 1 in DCN and DUK are not realized .

ATTENTION

For common suctions .

The flow of the pump , or pump preceding or following the section including the suction must not exceed **22 l / min .**

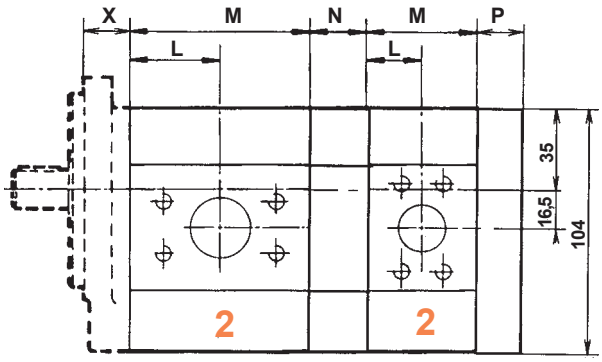

- Hydraulic characteristics ,
- Driving shaft ,
- Supply ports implantation
- Dimensions of the " Front bodies " : see the technical data sheets of the single pumps quoted see overleaf .

For mounting flanges DCN / DUK see chart overleaf .

JUNCTION BODY

Code A (VIII Sign) — **Common suction ports** (Capacity of the pump without suction ≥ to the halt of the capacity of the first stage pump)

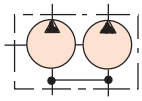

Code D (VIII Sign) — **Independent suction ports (internal communication)** (Fluid and tank imperatively identical)

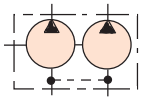

Dimensions **X** , see following page

SERIES (V - IX Sign)	Capacity (VI - X Sign)	L	M	N	P	Q	F	G	K
2	004 to 012	23,5	47,0	24	25,5				
	014 to 022	31,0	61,6						
	026 030	38,8	77,7						
1	001 to 003					42	17,9	35,8	18
	004 to 006						22,7	45,6	

MULTIPLE GEARED PUMPS

SERIES 2 (FLAT FRONT BODY)

Following Page

PUBLISHING 06 / 02 / 2002

Dimension readings and approximative characteristics subject to modifications .

P	II Sign	III Sign	IV Sign	2	VI Sign	VII Sign	A	2	X Sign	XI Sign	L	XIII Sign	XIV Sign	XV Sign	XVI Sign

For CODIFICATION , see data sheet F.T R 0150

N : Nitrile
V : Viton

Fixing kit for Pumps 2/2 Type DCN and DUK -

Primary Pump capacity (VI Sign)	Secondary Pump capacity (X Sign)	Fixing KIT reference
2004 to 2012	2004 to 2012	K5070323
2014 to 2022	2004 to 2012	K5070324
2014 to 2022	2014 to 2022	K5073127
2026-2030	2004 to 2012	K5070326
2026-2030	2014 to 2022	K5070327
2026-2030	2026-2030	K5070328

Fixing kit for Pumps 2/2/2 Type DCN and DUK -

Primary Pump capacity (VI Sign)	Secondary Pump capacity (X Sign)	Tertiary Pump capacity (XIV Sign)	Fixing KIT reference
2004 to 2012	2004 to 2012	2004 to 2012	K5070329
2014 to 2022	2004 to 2012	2004 to 2012	K5070330
2014 to 2022	2014 to 2022	2004 to 2012	K5070331
2014 to 2022	2014 to 2022	2014 to 2022	K5070332
2026-2030	2004 to 2012	2004 to 2012	K5070331
2026-2030	2014 to 2022	2004 to 2012	K5070332
2026-2030	2014 to 2022	2014 to 2022	K5070335
2026-2030	2026-2030	2004 to 2012	K5070335
2026-2030	2026-2030	2014 to 2022	K5070337
2026-2030	2026-2030	2026-2030	K5070338

Front body sheets Types (III - IV Sign)	Dimensions X	Data References
AAN (H)	20	F.T 20 292
AAN (C)	20	F.T 20 214
AAN (F)	20	F.T 20 215
BAN (H-C)	20	F.T 20 293
BAN (F-B)	20	F.T 20 953
DBN (C)	20	F.T 20 294
DCN (C)	18	F.T 20 296
DUK (C)	18	F.T 20 297

REWINDER: The 2014 pumps can be manufactured only with shafts of 10 B02 - 10 C02 - 30 A0 - 30 D01 Type.

Dimension readings and approximative characteristics subject to modifications .

TORQUE CALCULATION

Q Capacity in cc / rev
P Pressure in bar
ηm Mechanical efficiency (see catalogue C10)

Calculation of the torque for onr pump body : $\frac{1,56 \times Q \times P}{1000 \times \eta m} = C$ (m.daN)

Example : P 1 AAN 2015 H A 2008 H L 30 A01 Pressure : 2015 200 bar 2008 150 bar Speed : 1500 RPM

$\frac{1,56 \times 15 \times 200}{1000 \times 0,87} = 5,38$ m.daN

$\frac{1,56 \times 8 \times 150}{1000 \times 0,87} = 2,15$ m.daN

= 7,53 m.daN ⟹ Total torque

Preceding Page

MULTIPLE GEARED PUMPS

SERIES 2 (FLAT FRONT BODY)

PUBLISHING 06 / 02 / 2002

Home - general contents

Basic catalogue contents

CATALOGUE BASIC (B10)

Hydraulic gear pumps

Series 2

Thick Front Body

PUMPS CHARACTERISTICS

MOUNTING POSSIBILITIES

PUMPS TYPE : DBP

MULTIBODIED PUMPS

Edition 01 / 2003

B10 | 052 | 00

PUMPS CHARACTERISTICS

MODEL (V-VI Sign)	Capacity	PEAK PRESSURE		MAX. WORKING PRESSURE		Maxi Speed	NOMINAL FLOW at 1500 RPM	NOMINAL FLOW at Maxi Speed	Input power (kW) at 1000 RPM and 100 bar	Input torque at 100 bar and m.daN	Approximate weight
	cc / rev	bar	PSI	bar	PSI	RPM	l / min	l / min			Kg
2004	4,65	280	4060	240	3480	3500	6,97	16,2	0,92	0,78	1,6
2006	6,45	280	4060	240	3480	3500	9,67	22,5	1,27	1,15	
2008	8,25	280	4060	240	3480	3500	12,37	28,8	1,62	1,52	1,7
2010	10,12	280	4060	240	3480	3500	15,18	35,3	1,95	1,88	
2012	12	280	4060	240	3480	3500	18	42	2,31	2,25	
2014	15,52	250	3625	210	3045	3500	20,7	48,3	2,73	2,62	2,1
2015	15,52	250	3625	210	3045	3500	23,25	52,5	2,94	2,77	2,1
2018	19,12	200	2900	170	2465	3500	28,65	66,8	3,63	3,32	2,2
2022	22,87	175	2537	150	2175	3500	34,2	79,8	4,30	4,02	2,3
2026	27,6	175	2537	150	2175	3000	41,4	82,8	5,16	4,74	2,7
2030	31,2	175	2537	150	2175	3000	46,8	93,6	5,77	5,40	2,8

Performances and Output Curves. (Thanks to contact us)
(Tests effected with Oil SHELL Tellus T 46)

The pump can only run in one way rotation (Precise the direction of rotation on order).

The working cycles hereunder are possible with hydraulic mineral oil for viscosities between 12 and 150 cSt (65,2 and 700 SUS) .

The minimum viscosity of 12 cSt (65,2 SUS) is available for a maximum temperature in the hydraulic circuit.

Working temperature : - 20 °C (4 °F) to + 80 °C (176 °F) (140 °C (284 °F) with Viton shaft seal).

Full flow filtration : 10 to 15 microns at the pressure port of the pump or on the return circuit.
Filtration on the suction side : 125 microns.

Pressure at the inlet of the pump :
- Minimum 0,7 bar absolute (Maxi depressure 300 millibar with regard to the air pressure).
- Maximum 2 bar absolute or 1 bar over the air pressure.

The hereabove characteristics concern the pumps driven by elastic couplings perfectly aligned without any external radial or axial force.

For any other coupling, see technical data sheet F.T R 0009.

For use at maximum working conditions and/or intensive cycles, thanks to consult our technical sales service for validation.

TORQUE CALCULATION

Q Capacity in cc / rev

P Pressure in bar

ηm Mechanical efficiency (see catalogue C10)

Calculation of the torque : $\frac{1,56 \times Q \times P}{1000 \times \eta m} = C$ (m.daN)

Example : P 1DBP 2015 H L 10 C07

Pressure : 200 bar
Speed : 1500 RPM

Torque = $\frac{1,56 \times 15 \times 200}{1000 \times 0,87}$ = 5,38 m.daN

Dimension readings and approximative characteristics subject to modifications.

F.T R 0223

" BASIC " CATALOGUE MOUNTING POSSIBILITIES

FRONT BODIES (III - IV Sign)			CENTRAL BODIES (VII Sign)		REAR BODY (VIII Sign)	TYPE and SHAFT CODE (IX - X - XI Sign)	
A	D	Z	H	C	L	10	20
	DBP					10C07	20C15

Not feasible versions in " BASIC "

Other possibilities : please refer to " GENERAL " catalogue G10

Our " BASIC " catalogue includes versions of our series 0 to 5 pumps according to european and american Standards (SAE)

Dimension readings and approximative characteristics subject to modifications .

F.T R 0232

HYDRAULIC GEAR PUMPS

SERIES 2 (THICK FRONT BODY)

PUBLISHING 05 / 07 / 2000

P	II Sign	DB	P	2	VI Sign	VII Sign	L	IX Sign	X Sign	XI Sign	XII Sign

For CODIFICATION , see data sheet F.T R 0149

N : Nitrile
V : Viton

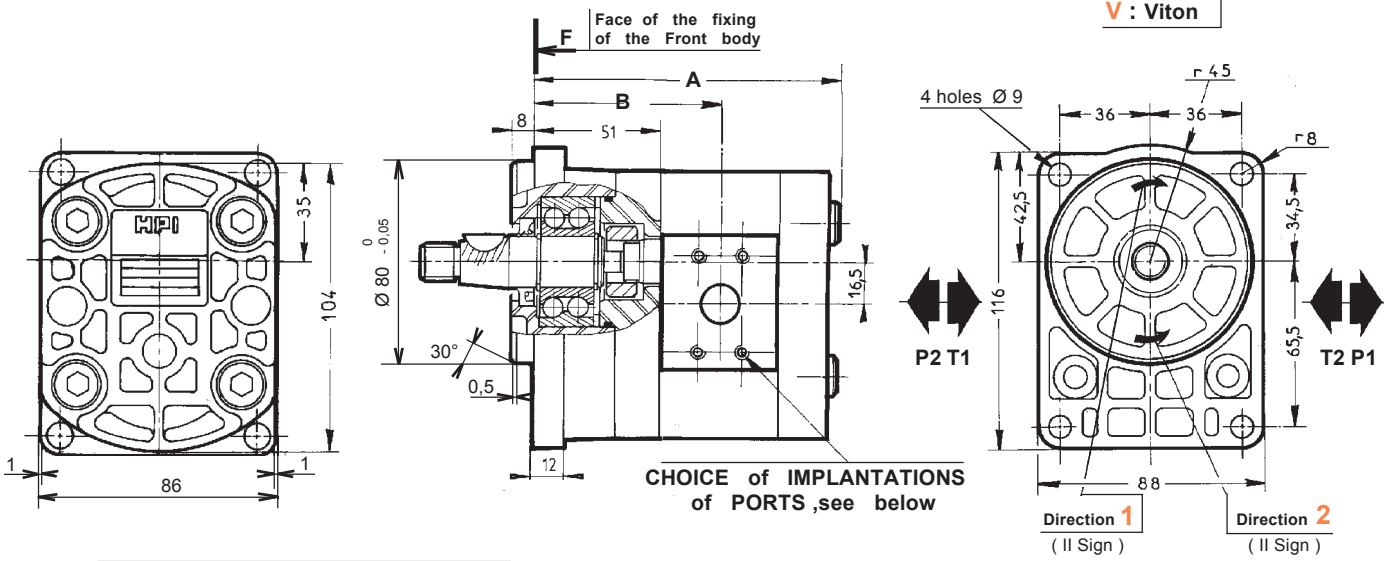

CHOICE of CAPACITY (VI Sign)	Dimensions A	Dimensions B
004 006 008 010 012	123,5	74,5
014 015 018 022	138	82
026 030	154	90

Dimension readings and approximative characteristics subject to modifications .

CHOICE of DRIVING SHAFTS

10 (IX - X Sign)
C07 (XI Sign)

Taper 1 / 5

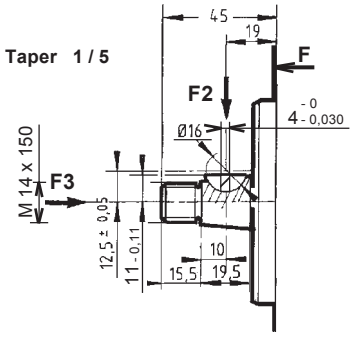

Delivered with Nut : 102 045

F2 Maxi : 120 daN
F3 Maxi : 50 daN

Maxi transmissible torque
7 m.daN

20 (IX - X Sign)
C15 (XI Sign)

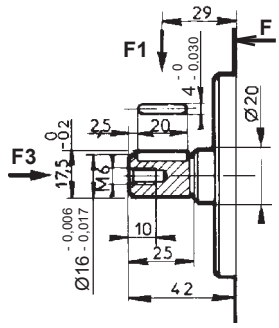

F1 Maxi : 100 daN
F3 Maxi : 50 daN

Maxi transmissible torque
5 m.daN

Multiple geared pumps , see data sheet F.T 20 890

CHOICE of IMPLANTATIONS of PORTS (II Sign)	Capacity (VII Sign)	INLET (T) ØC	INLET (T) D	INLET (T) E	OUTLET (P) ØC	OUTLET (P) D	OUTLET (P) E	CATALOGUE N° 70 Ref. of RECOMMENDED FLANGES (for speed 1500 rev / min) INLET (T)	OUTLET (P)
H (HPI) M6 effective depth 12	004 to 012	20	17,4	38	15	17,4	38	1 / 2 " BSP N: 2.500055 V: 2.504126	3 / 8 " BSP N: 2.500054 V: 2.504994
	014 to 030	26	47,6	22,4	15	17,4	38	1 " BSP N: 2.500496 V: 2.504117	1 / 2 " BSP N: 2.500055 V: 2.504126
C (Square) M6 effective depth 12	004 to 012	20	40		15	35		1 / 2 " BSP N: 367141.502	3 / 8 " BSP N: 367141.702
	014 to 030							3 / 4 " BSP N: 367141.503	1 / 2 " BSP N: 367141.703

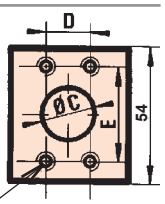

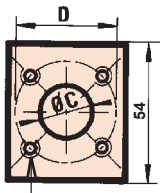

F.T 20 295

HYDRAULIC GEAR PUMPS SERIES 2 TYPE DBP

PUBLISHING 06 / 02 / 2002

P	II Sign	DB	P	2	VI Sign	VII Sign	A	2	X Sign	XI Sign	L	XIII Sign	XIV Sign	XV Sign	XVI Sign

For CODIFICATION , see data sheet F.T R 0150

N : Nitrile
V : Viton

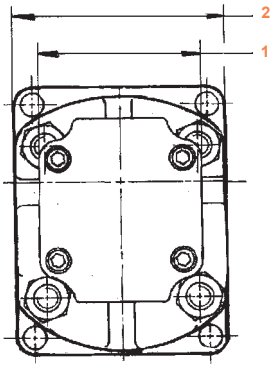

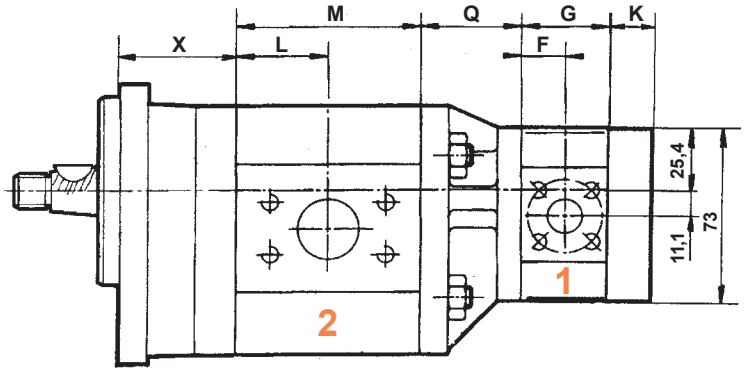

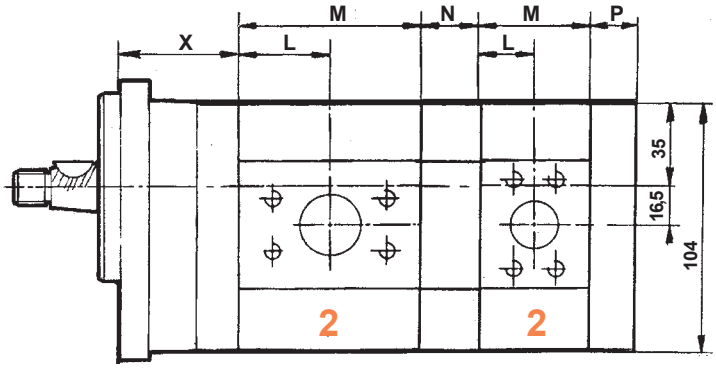

ATTENTION

For common suctions .

The flow of the pump , or pump preceding or following the section including the suction must not exceed **22 l / min .**

- Hydraulic characteristics ,
- Driving shaft ,
- Supply ports implantation (Only for Code C of the Séries 1),
- Dimensions of the " Front bodies " : see the technical data sheets of the single pumps quoted below .

Front body Type (III - IV Sign)	Dimensions X	Data sheet reference
DBP	51	F.T 20 295

JUNCTION BODY

Code A (VIII Sign) — **Common suction ports** (Capacity of the pump without suction ≥ to the halt of the capacity of the first stage pump)

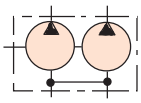

Code D (VIII Sign) — **Independent suction ports (internal communication)** (Fluid and tank imperatively identical)

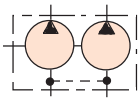

SERIES (V - IX Sign)	Capacity (VI - X Sign)	L	M	N	P	Q	F	G	K
2	004 to 012	23,5	47,0	24	25,5				
	014 to 022	31,0	61,6						
	026 030	38,8	77,7						
1	001 to 003					42	17,9	35,8	18
	004 to 006						22,7	45,6	

TORQUE CALCULATION

Q Capacity in cc / rev

P Pressure in bar

ηm Mechanical efficiency (see catalogue C10)

Calculation of the torque for onr pump body : $\frac{1,56 \times Q \times P}{1000 \times \eta m} = C$ (m.daN)

Example : P 1 DBP 2015 H A 2008 H L 10 C07 Pressure : 2015 200 bar 2008 150 bar Speed : 1500 RPM

$\frac{1,56 \times 15 \times 200}{1000 \times 0,87} = 5,38$ m.daN

$\frac{1,56 \times 8 \times 150}{1000 \times 0,87} = 2,15$ m.daN

MULTIPLE GEARED PUMPS = 7,53 m.daN ⟹ Total torque

SERIES 2 (THICK FRONT BODY)

Dimension readings and approximative characteristics subject to modifications .

F.T 20 890

Home - general contents

Basic catalogue contents

CATALOGUE BASIC (B10)

Hydraulic gear pumps

Series 3

Flat Front Body

PUMPS CHARACTERISTICS

MOUNTING POSSIBILITIES

PUMPS TYPE : AAN
BAN
CBN

MULTIBODIED PUMPS

Edition 01 / 2003

B10 | 060 | 00

PUMPS CHARACTERISTICS

MODEL (V-VI Sign)	Capacity	PEAK PRESSURE		MAX. WORKING PRESSURE		Maxi Speed	NOMINAL FLOW at 1500 RPM	NOMINAL FLOW at Maxi Speed	Input power (kW) at 1000 RPM and 100 bar	Input torque at 100 bar and m.daN	Approximate weight
	cc / rev	bar	PSI	bar	PSI	RPM	l / min	l / min			Kg
3020	21,10	275	3987	235	3410	3000	31,65	63,3	3,75	3,35	5,6
3025	25,80	275	3987	235	3410	3000	38,70	77,4	4,60	4,10	
3031	32,10	275	3987	235	3410	3000	48,15	96,3	5,66	5,11	
3040	41,50	275	3987	235	3410	3000	62,25	124,5	7,28	6,60	5,7
3050	51,65	250	3625	215	3120	3000	77,47	154,9	8,97	8,22	6,9
3060	62,60	225	3262	190	2755	2500	93,90	156,5	10,60	9,96	7
3071	73,55	225	3262	190	2755	2500	110,32	183,8	12,50	11,71	7
3080	82,95	200	2900	170	2465	2200	124,42	182,4	14,20	13,20	7,1
3090	92,95	150	2175	130	1885	2000	139,42	185,9	16,30	14,80	7,8
3100	103,9	150	2175	130	1885	2000	155,85	207,8	18,10	16,54	8

Performances and Output Curves. (Thanks to contact us)
(Tests effected with Oil SHELL Tellus T 46)

Dimension readings and approximative characteristics subject to modifications .

The pump can only run in one way rotation (Precise the direction of rotation on order) .

The working cycles hereunder are possible with hydraulic mineral oil for viscosities between 12 and 150 cSt (65,2 and 700 SUS) .

The minimum viscosity of 12 cSt (65,2 SUS) is available for a maximum temperature in the hydraulic circuit .

Working temperature : - 20 °C (4 °F) to + 80 °C (176 °F) (140 °C (284 °F) with Viton shaft seal) .

Full flow filtration : 10 to 15 microns at the pressure port of the pump or on the return circuit .
Filtration on the suction side : 125 microns .

Pressure at the inlet of the pump :
- Minimum 0,7 bar absolute (Maxi depressure 300 millibar with regard to the air pressure) .
- Maximum 2 bar absolute or 1 bar over the air pressure .

The hereabove characteristics concern the pumps driven by elastic couplings perfectly aligned without any external radial or axial force .

For any other coupling , see technical data sheet F.T R 0009 .

For use at maximum working conditions and/or intensive cycles, thanks to consult our technical sales service for validation.

TORQUE CALCULATION

Q Capacity in cc / rev

P Pressure in bar

η_m Mechanical efficiency (see catalogue C10)

Calculation of the torque : $\frac{1,56 \times Q \times P}{1000 \times \eta_m} = C$ (m.daN)

Example : P 1 AAN 3060 H L 30 A02

Pressure : 200 bar
Speed : 2000 RPM

$$\text{Torque} = \frac{1,56 \times 60 \times 200}{1000 \times 0,88} = 21,27 \text{ m.daN}$$

F.T R 0224

PUBLISHING 06 / 02 / 2002

" BASIC " CATALOGUE MOUNTING POSSIBILITIES

FRONT BODIES (III - IV Sign)				CENTRAL BODIES (VII Sign)		REAR BODY (VIII Sign)	TYPE and SHAFT CODE (IX - X - XI Sign)			
A	B	C	D	H	B	L	10	20	30	40
AAN								20A02	30A02	
	BAN						10B03			
		CBN						20C04		40C04

Not feasible versions in " BASIC "

Other possibilities : please refer to " GENERAL " catalogue G10

Our " BASIC " catalogue includes versions of our series 0 to 5 pumps according to european and american Standards (SAE)

Dimension readings and approximative characteristics subject to modifications .

F.T R 0223

HYDRAULIC GEAR PUMPS

SERIES 3 (FLAT FRONT BODY)

P	II Sign	AA	N	3	VI Sign	H	L	IX Sign	X Sign	XI Sign	XII Sign

For CODIFICATION , see data sheet F.T R 0149

N : Nitrile
V : Viton

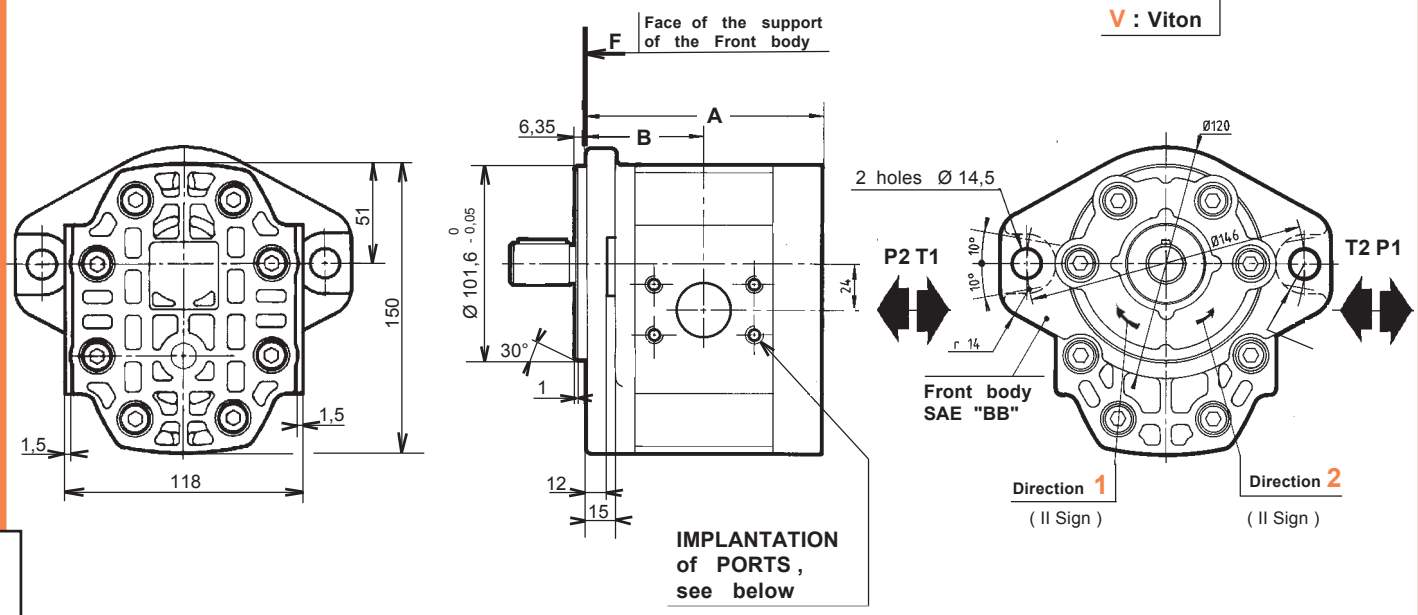

Dimension readings and approximative characteristics subject to modifications .

CHOICE of the CAPACITY (VI Sign)	Dimensions A	Dimensions B
020 025 031 040	122,7	61,3
050 060	149,2	74,5
071 080 090 100	169,2	84,2

CHOICE of DRIVING SHAFTS

20 (IX - X Sign)
A02 (XI Sign)

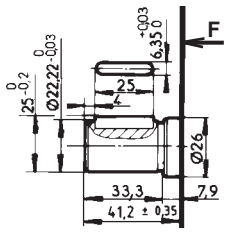

Maxi transmissible torque
29 m.daN

30 (IX - X Sign)
A02 (XI Sign)

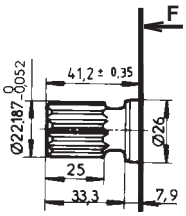

Involute spline to SAE Standard - 13 theet - 7/8 " Pitch 16/32 - Flat root 30° Pressure angle

Maxi transmissible torque
31 m.daN

Multiple geared pumps , see data sheet F.T 30 349

IMPLANTATION of PORTS (VII Sign)	Capacity (VI Sign)	INLET (T) ØC	INLET (T) D	INLET (T) E	OUTLET (P) ØC	OUTLET (P) D	OUTLET (P) E	CATALOGUE N° 70 Ref. of RECOMMENDED FLANGES (for speed 1500 rev / min)	INLET (T)	OUTLET (P)
H (HPI)	020 to 040	28	52,4	26,2	18	52,4	26,2	3020 3025	1" BSP N: 3.500072 - V: 3.505060	1/2" BSP N: 3.500070 - V: 3.505058
								3031 3040	1" 1/4 BSP N: 3.500103 - V: 3.505061	3/4" BSP N: 3.500071 - V: 3.505059
	050 - 060	42	35,6	69,8	22	52,4	26,2	3050 3060	1" 1/4 BSP N: 3.500492 - V: 3.505066	1" BSP N: 3.500072 - V: 3.505060
	071 to 100	42	35,6	69,8	24	52,4	26,2	3071 3080	1" 1/2 BSP N: 3.500493 - V: 3.505067	1" BSP N: 3.500072 - V: 3.505060
								3090 3100	1" 1/2 BSP N: 3.500493 - V: 3.505067	1" 1/4 BSP N: 3.500103 - V: 3.505061

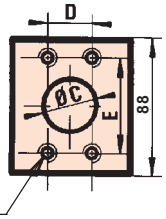

M8
effective depth 16

F.T 30 309

HYDRAULIC GEAR PUMPS SERIES 3 TYPE AAN

PUBLISHING 05 / 07 / 2000

P	II Sign	BA	N	3	VI Sign	H	L	1	0	B03	XII Sign

For CODIFICATION , see data sheet F.T R 0149

N : Nitrile
V : Viton

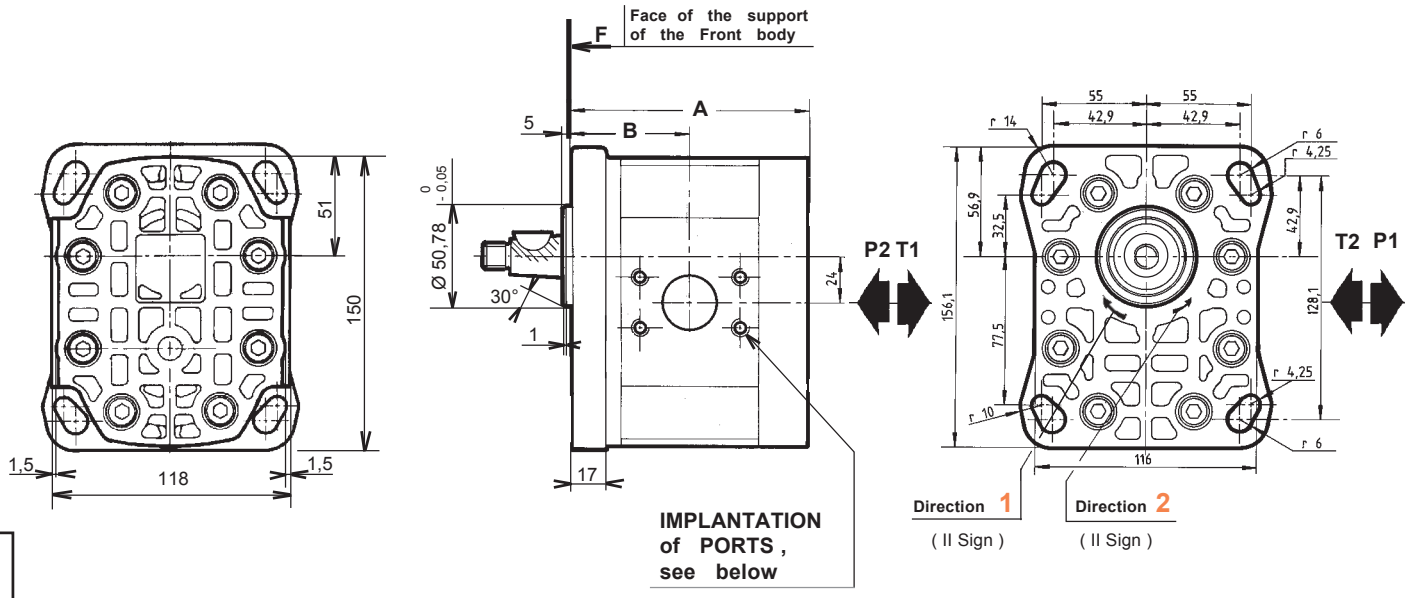

Dimension readings and approximative characteristics subject to modifications .

CHOICE of the CAPACITY (VI Sign)	Dimensions A	Dimensions B
020 025 031 040	122,7	61,3
050 060	149,2	74,5
071 080 090 100	169,2	84,2

DRIVING SHAFT

10 (IX - X Sign)
B03 (XI Sign)

Taper 1 / 8

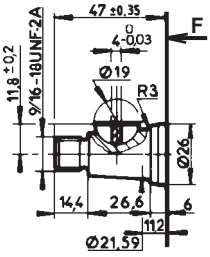

Delivered with Nut and wascher — Réf. : 100 734 — Réf. : 103 945

Maxi transmissible torque
53 m.daN

Multiple geared pumps , see data sheet F.T 30 349

IMPLANTATION of PORTS

(VII Sign)

H
(HPI)

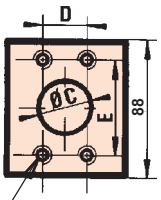

M8
effective depth 16

Capacity (VI Sign)	INLET (T) ØC	INLET (T) D	INLET (T) E	OUTLET (P) ØC	OUTLET (P) D	OUTLET (P) E
020 to 040	28	52,4	26,2	18	52,4	26,2
050 - 060	42	35,6	69,8	22	52,4	26,2
071 to 100	42	35,6	69,8	24	52,4	26,2

CATALOGUE N° 70
Ref. of RECOMMENDED FLANGES (for speed 1500 rev / min)

	INLET (T)	OUTLET (P)
3020 3025	1" BSP N: 3.500072 - V: 3.505060	1/2" BSP N: 3.500070 - V: 3.505058
3031 3040	1" 1/4 BSP N: 3.500103 - V: 3.505061	3/4" BSP N: 3.500071 - V: 3.505059
3050 3060	1" 1/4 BSP N: 3.500492 - V: 3.505066	1" BSP N: 3.500072 - V: 3.505060
3071 3080	1" 1/2 BSP N: 3.500493 - V: 3.505067	1" BSP N: 3.500072 - V: 3.505060
3090 3100	1" 1/2 BSP N: 3.500493 - V: 3.505067	1" 1/4 BSP N: 3.500103 - V: 3.505061

P	II Sign	BA	N	3	VI Sign	B	L	IX Sign	X Sign	XI Sign	XII Sign

For CODIFICATION , see data sheet F.T R 0149

N : Nitrile
V : Viton

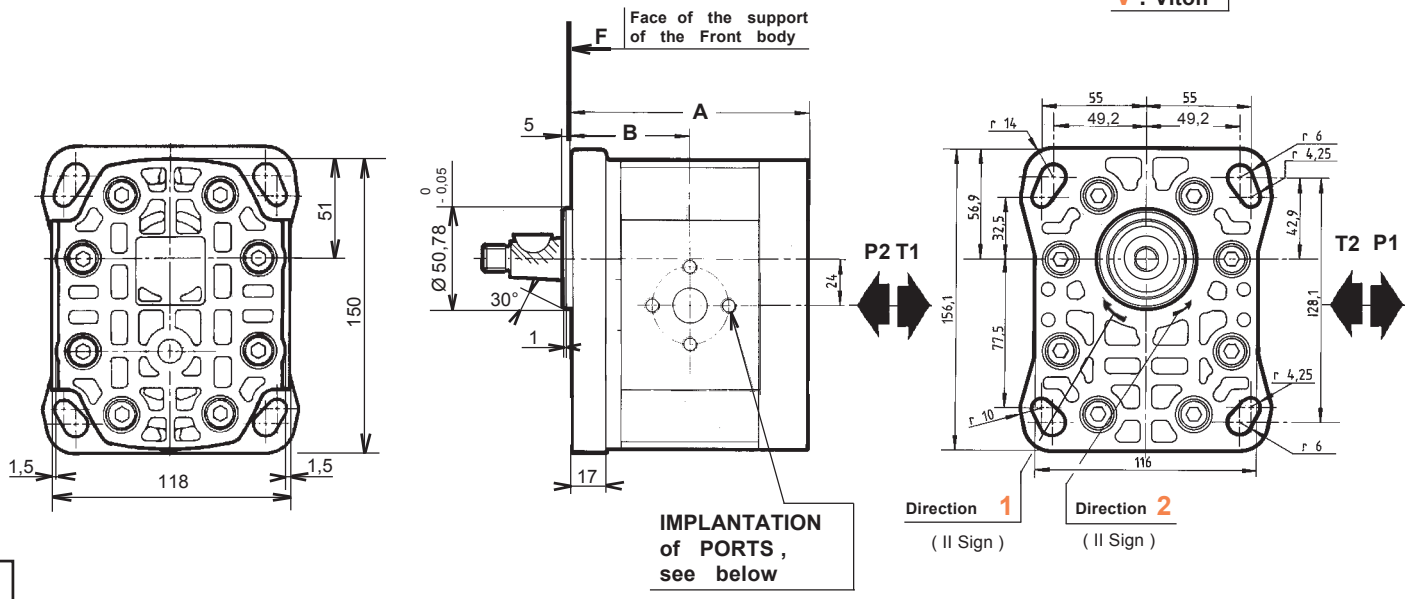

Dimension readings and approximative characteristics subject to modifications .

CHOICE of the CAPACITY (VI Sign)	Dimensions A	Dimensions B
020 025 031 040	122,7	61,3

DRIVING SHAFT

10 (IX - X Sign)
B03 (XI Sign)

Taper 1 / 8

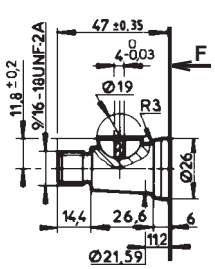

Delivered with Nut and Washer Ref. : 100 734
Ref. : 103 945

Maxi transmissible torque
53 m.daN

Multiple geared pumps , see data sheet F.T 30 349

IMPLANTATION of PORTS (VII Sign)	Capacity (VI Sign)	INLET (T) ØC	D		ØF	G	OUTLET (T) ØC	D		ØF	G	CATALOGUE N° 70 Ref. of RECOMMANDED FLANGES (for speed 1500 rev / min) INLET (T)	OUTLET (P)
B (Italian)	020 to 040	27	51		M10	16	18	40		M8	16	1 " BSP N: X.368555.003	3 / 4 " BSP N: X.367508.102

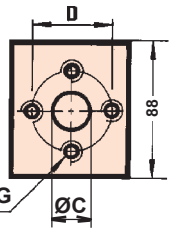

Ø F
effective depth G

F.T 30 888

HYDRAULIC GEAR PUMPS SERIES 3 TYPE BAN

PUBLISHING 06 / 02 / 2002

P	II Sign	CB	N	3	VI Sign	H	L	IX Sign	X Sign	XI Sign	XII Sign

For CODIFICATION , see data sheet F.T R 0149

N : Nitrile
V : Viton

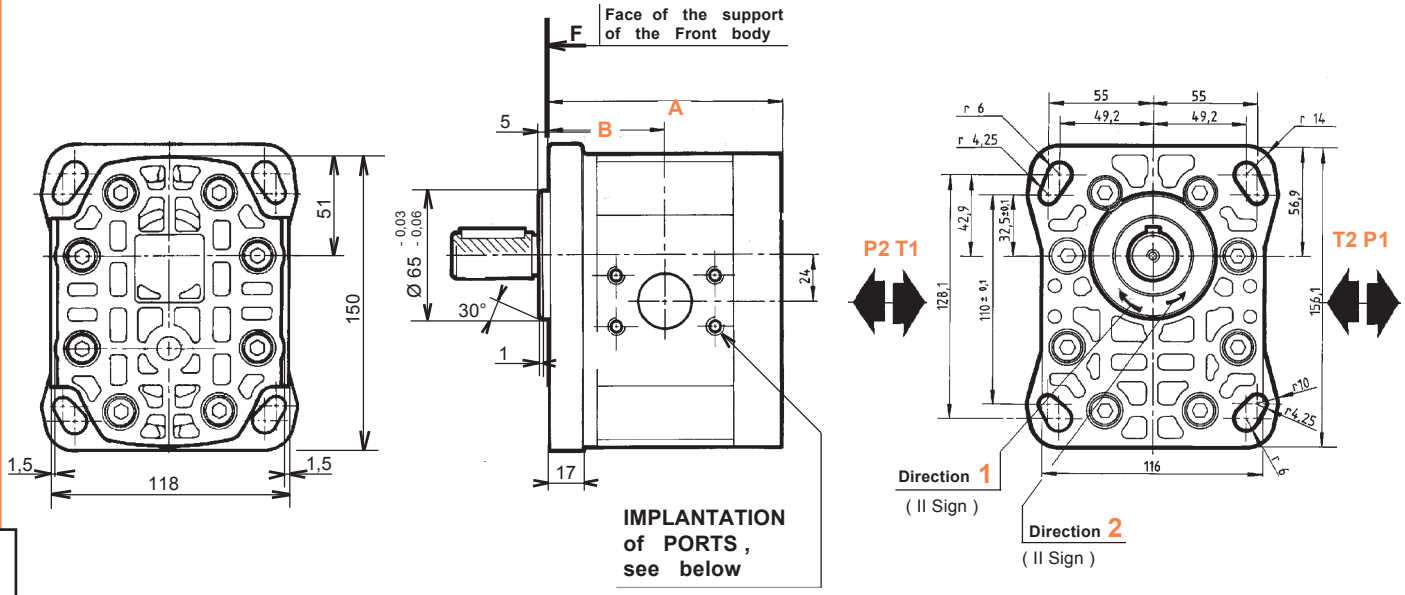

Dimension readings and approximative characteristics subject to modifications .

CHOICE of the CAPACITY (VI Sign)	Dimensions A	Dimensions B
020 025 031 040	122,7	61,3
050 060	149,2	74,5
071 080 090 100	169,2	84,2

Multiple geared pumps , see data sheet F.T 30 349

CHOICE of DRIVING SHAFTS

20 (IX - X Sign)
C04 (XI Sign)

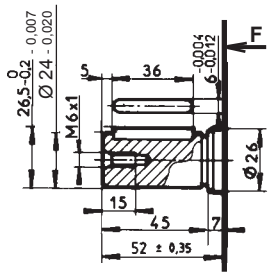

Maxi transmissible torque
32 m.daN

40 (IX - X Sign)
C04 (XI Sign)

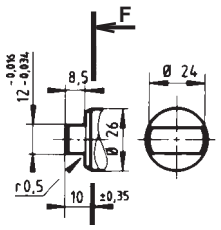

Maxi transmissible torque
28 m.daN

IMPLANTATION of PORTS

(VII Sign)

H
(HPI)

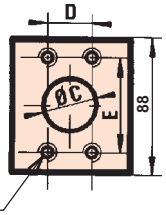

M8
effective depth 16

Capacity (VI Sign)	INLET (T) ØC	INLET (T) D	INLET (T) E	OUTLET (P) ØC	OUTLET (P) D	OUTLET (P) E
020 to 040	28	52,4	26,2	18	52,4	26,2
050 - 060	42	35,6	69,8	22	52,4	26,2
071 to 100	42	35,6	69,8	24	52,4	26,2

CATALOGUE N° 70
Ref. of RECOMMENDED FLANGES (for speed 1500 rev / min)

	INLET (T)	OUTLET (P)
3020 3025	1" BSP N: 3.500072 - V: 3.505060	1/2" BSP N: 3.500070 - V: 3.505058
3031 3040	1" 1/4 BSP N: 3.500103 - V: 3.505061	3/4" BSP N: 3.500071 - V: 3.505059
3050 3060	1" 1/4 BSP N: 3.500492 - V: 3.505066	1" BSP N: 3.500072 - V: 3.505060
3071 3080	1" 1/2 BSP N: 3.500493 - V: 3.505067	1" BSP N: 3.500072 - V: 3.505060
3090 3100	1" 1/2 BSP N: 3.500493 - V: 3.505067	1" 1/4 BSP N: 3.500103 - V: 3.505061

F.T 30 315

HYDRAULIC GEAR PUMPS SERIES **3** TYPE **CBN**

PUBLISHING 05 / 07 / 2000

P	II Sign	III Sign	IV Sign	3	VI Sign	H	A	2	X Sign	H	L	XIII Sign	XIV Sign	XV Sign	XVI Sign

For CODIFICATION , see data sheet F.T R 0150

N : Nitrile
V : Viton

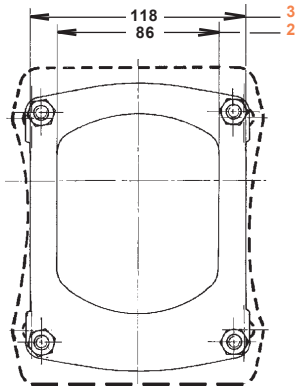

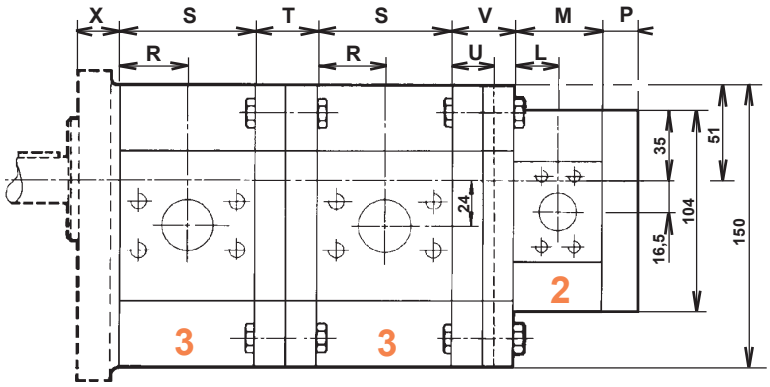

ATTENTION

For common suctions .

The flow of the pump , or pump preceding or following the section including the suction must not exceed **160 l / min .**

- **Hydraulic characteristics ,**
- **Driving shafts ,**
- **Supply ports implantation**
- **Dimensions of the " Front bodies " : see the technical data sheets of the single pumps quoted below.**

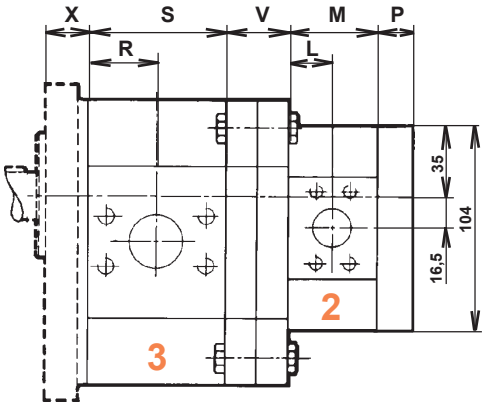

JUNCTION BODY

Code A (VIII Sign) — **Common suction ports** (Capacity of the pump without suction ≥ to the half of the capacity of the first stage pump)

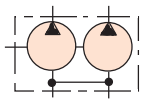

Code D (VIII Sign) — **Independent suction ports (internal communication)** (Fluid and tank imperatively identical)

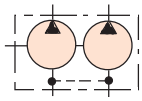

Front body Types (III - IV Sign)	Dimensions X	Data sheets References
AAN	25	F.T 30 309
BAN	25	F.T 30 314 - F.T 30 888
CBN	25	F.T 30 315

SERIES (V - IX Sign)	Capacity (VI - X Sign)	R	S	T	U	V	Q	L	M	P
3	020 to 040	36,3	72,7	50	25	45				
	050 060	49,5	99,2							
	071 to 100	59,2	119,2							
2	004 to 012						42	23,5	47,0	25,5
	014 to 022							31	61,6	
	026 030							38,8	77,7	

TORQUE CALCULATION

Q Capacity in cc / rev

P Pressure in bar

ηm Mechanical efficiency (see catalogue C10)

Calculation of the torque for one pump body : $\frac{1,56 \times Q \times P}{1000 \times \eta m}$ = C (m.daN)

Example : P 1 CBN 3060 H A 2008 H L 20 C04 Pressure : 3060 : 200 bar 2008 : 150 bar Speed : 2000 RPM

$\frac{1,56 \times 60 \times 200}{1000 \times 0,88}$ = 21,27 m.daN

$\frac{1,56 \times 8 \times 150}{1000 \times 0,85}$ = 2,2 m.daN

= **23,47 m.daN** ⟹ Total torque

Dimension readings and approximative characteristics subject to modifications .

F.T 30 349

MULTIPLE GEARED PUMPS SERIES 3 (FLAT FRONT BODY)

Home - general contents

Basic catalogue contents

CATALOGUE BASIC (B10)

Hydraulic gear pumps

Series 3

Thick Front Body

PUMPS CHARACTERISTICS

MOUNTING POSSIBILITIES

PUMPS TYPE : AAP / AEP
ADP
ZFC

MULTIBODIED PUMPS

Edition 01 / 2003

B10 | 072 | 00

PUMPS CHARACTERISTICS

MODEL (V-VI Sign)	Capacity	PEAK PRESSURE		MAX. WORKING PRESSURE		Maxi Speed	NOMINAL FLOW		Input power (kW) at 1000 RPM and 100 bar	Input torque at 100 bar and m.daN	Approximate weight
							at 1500 RPM	at Maxi Speed			
	cc / rev	bar	PSI	bar	PSI	RPM	l / min	l / min			Kg
3020	21,10	275	3987	235	3408	3000	31,65	63,3	3,75	3,35	6,4
3025	25,80	275	3987	235	3408	3000	38,70	77,4	4,60	4,10	
3031	32,10	275	3987	235	3408	3000	48,15	96,3	5,66	5,11	
3040	41,50	275	3987	235	3408	3000	62,25	124,5	7,28	6,60	6,5
3050	51,65	250	3625	215	3120	3000	77,47	154,9	8,97	8,22	7,7
3060	62,60	225	3262	190	2780	2500	93,90	156,5	10,60	9,96	7,8
3071	73,55	225	3262	190	2780	2500	110,32	183,8	12,50	11,71	7,8
3080	82,95	200	2900	170	2465	2200	124,42	182,4	14,20	13,20	7,9
3090	92,95	150	2175	130	1885	2000	139,42	185,9	16,30	14,80	8,6
3100	103,9	150	2175	130	1885	2000	155,85	207,8	18,10	16,54	8,8

Dimension readings and approximative characteristics subject to modifications .

Performances and Output Curves. (Thanks to contact us)

(Tests effected with Oil SHELL Tellus T 46)

The pump can only run in one way rotation (Precise the direction of rotation on order) .

The working cycles hereunder are possible with hydraulic mineral oil for viscosities between 12 and 150 cSt (65,2 and 700 SUS) .

The minimum viscosity of 12 cSt (65,2 SUS) is available for a maximum temperature in the hydraulic circuit .

Working temperature : - 20 °C (4 °F) to + 80 °C (176 °F) (140 °C (284 °F) with Viton shaft seal) .

Full flow filtration : 10 to 15 microns at the pressure port of the pump or on the return circuit .
Filtration on the suction side : 125 microns .

Pressure at the inlet of the pump :
- Minimum 0,7 bar absolute (Maxi depressure 300 millibar with regard to the air pressure) .
- Maximum 2 bar absolute or 1 bar over the air pressure .

The hereabove characteristics concern the pumps driven by elastic couplings perfectly aligned without any external radial or axial force .

For any other coupling , see technical data sheet F.T R 0009 .

For use at maximum working conditions and/or intensive cycles, thanks to consult our technical sales service for validation.

TORQUE CALCULATION

Q Capacity in cc / rev

P Pressure in bar

ηm Mechanical efficiency (see catalogue C10)

Calculation of the torque : $\frac{1,56 \times Q \times P}{1000 \times \eta m} = C$ (m.daN)

Example : P 1 AAP 3060 H L 30 A19

Pressure : 200 bar
Speed : 2000 RPM

Torque = $\frac{1,56 \times 60 \times 200}{1000 \times 0,88}$ = 21,27 m.daN

F.T R 0225

" BASIC " CATALOGUE MOUNTING POSSIBILITIES

FRONT BODIES (III - IV Sign)		CENTRAL BODY (VII Sign)	REAR BODY (VIII Sign)	TYPE and SHAFT CODE (IX X - XI Sign)	
A	Z	H	L	20	30
AAP AEP				20A07	30A19
ADP				20A05	30A04
	ZFC				30D04

Not feasible versions in " BASIC "

Other possibilities : please refer to " GENERAL " catalogue G10

Our " BASIC " catalogue includes versions of our series 0 to 5 pumps according to european and american Standards (SAE)

HYDRAULIC GEAR PUMPS

SERIES 3 (THICK FRONT BODY)

Dimension readings and approximative characteristics subject to modifications .

F.T R 0234

PUBLISHING 06 / 02 / 2002

P	II Sign	III Sign	P	3	VI Sign	H	L	IX Sign	X Sign	XI Sign	XII Sign

For CODIFICATION , see data sheet F.T R 0149

N : Nitrile
V : Viton

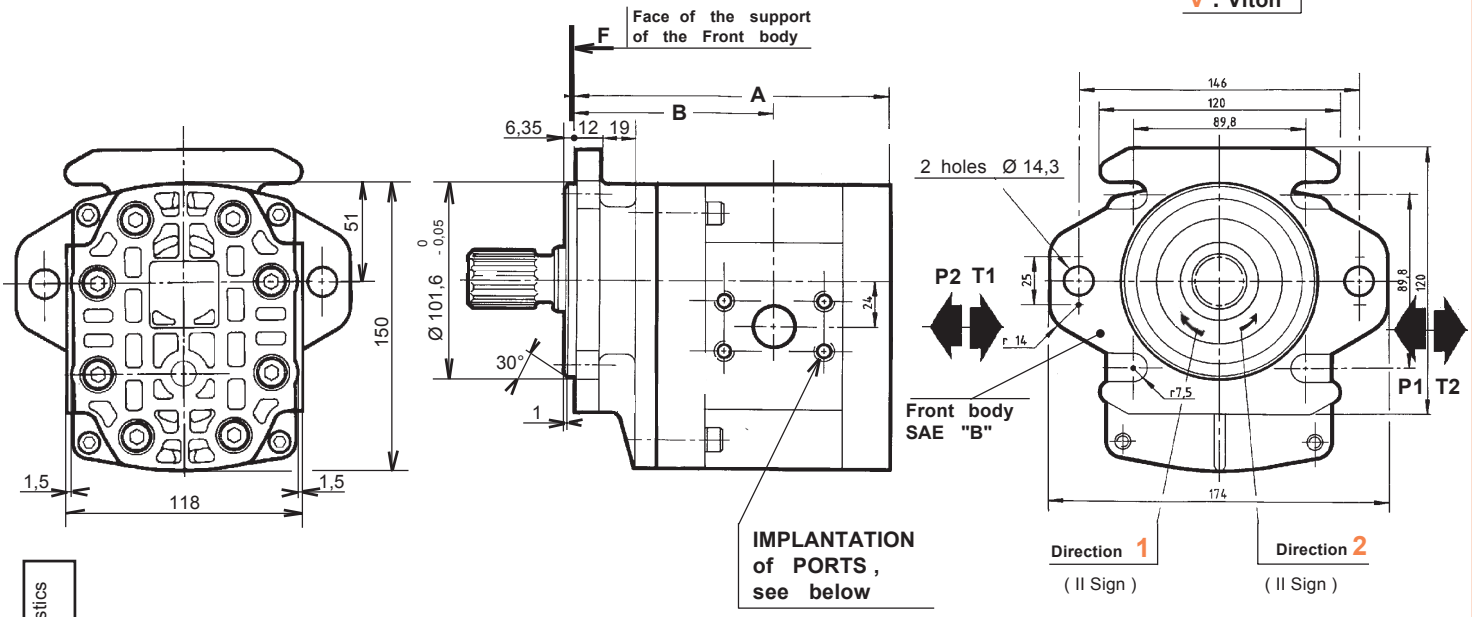

Dimension readings and approximative characteristics subject to modifications .

CHOICE of the CAPACITY (VI Sign)	Dimensions A	Dimensions B
020 025 031 040	165,7	104,3
050 060	192,2	117,5
071 080 090 100	212,2	127,2

Multiple geared pumps , see data sheet F.T 30 849

CHOICE of DRIVING SHAFTS

20 (IX - X Sign)
A07 (XI Sign)

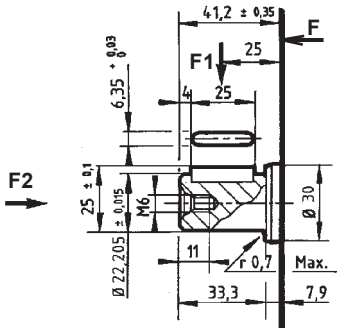

F1 Maxi : 140 daN
F2 Maxi : 50 daN

Maxi transmissible torque
29 m.daN

30 (IX - X Sign)
A19 (XI Sign)

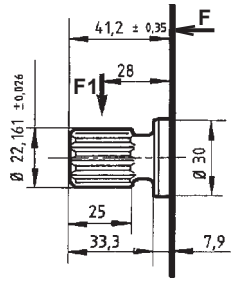

Involute spline to SAE Standard 13 theet - 7 / 8 " SAE
Pitch 16/32 - Flat root
30° Pressure angle

F1 Maxi : 120 daN
F2 Maxi : 50 daN

Maxi transmissible torque
31 m.daN

IMPLANTATION of PORTS

(VII Sign)

H
(HPI)

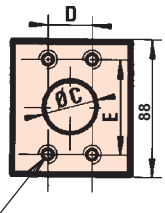

M8 prof. utile 16

Capacity (VI Sign)	INLET (T) ØC	INLET (T) D	INLET (T) E	OUTLET (P) ØC	OUTLET (P) D	OUTLET (P) E
020 to 040	28	52,4	26,2	18	52,4	26,2
050 - 060	42	35,6	69,8	22	52,4	26,2
071 to 100	42	35,6	69,8	24	52,4	26,2

CATALOGUE N° 70
Ref. of RECOMMENDED FLANGES (for speed 1500 rev / min)

	INLET (T)	OUTLET (P)
3020 3025	1" BSP N: 3.500072 - V: 3.505060	1/2" BSP N: 3.500070 - V: 3.505058
3031 3040	1" 1/4 BSP N: 3.500103 - V: 3.505061	3/4" BSP N: 3.500071 - V: 3.505059
3050 3060	1" 1/4 BSP N: 3.500492 - V: 3.505066	1" BSP N: 3.500072 - V: 3.505060
3071 3080	1" 1/2 BSP N: 3.500493 - V: 3.505067	1" BSP N: 3.500072 - V: 3.505060
3090 3100	1" 1/2 BSP N: 3.500493 - V: 3.505067	1" 1/4 BSP N: 3.500103 - V: 3.505061

F.T 30 310

HYDRAULIC GEAR PUMPS SERIES 3 TYPE AAP - AEP

P	II Sign	AD	P	3	VI Sign	H	L	IX Sign	X Sign	XI Sign	XII Sign

For CODIFICATION , see data sheet F.T R 0149

N : Nitrile
V : Viton

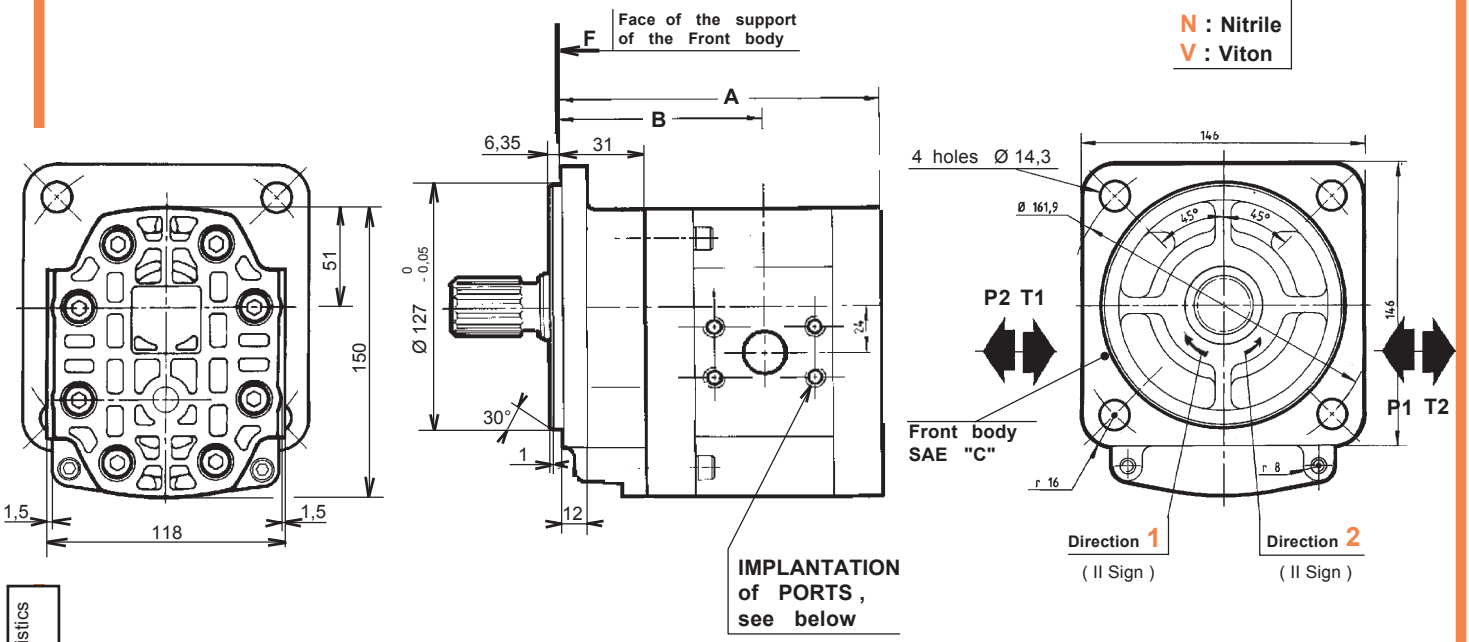

Dimension readings and approximative characteristics subject to modifications .

CHOICE of the CAPACITY (VI Sign)	Dimensions A	Dimensions B
020 025 031 040	165,7	104,3
050 060	192,2	117,5
071 080 090 100	212,2	127,2

CHOICE of DRIVING SHAFTS

20 (IX - X Sign)
A05 (XI Sign)

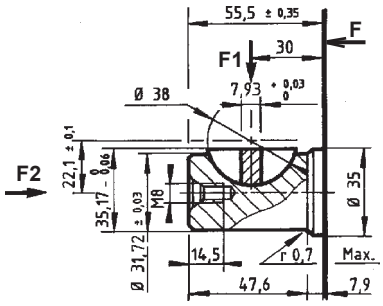

F1 Maxi : 120 daN
F2 Maxi : 50 daN

Maxi transmissible torque
43 m.daN

30 (IX - X Sign)
A04 (XI Sign)

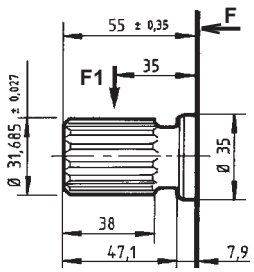

Involute spline to SAE Standard - 14 theet - 1" 1/4 SAE
Pitch 12/24
30° Pressure angle

F1 Maxi : 120 daN
F2 Maxi : 50 daN

Maxi transmissible torque
50 m.daN

Multiple geared pumps , see data sheet F.T 30 849

IMPLANTATION of PORTS

(VII Sign)

H
(HPI)

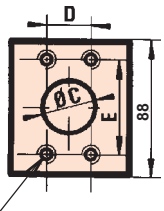

M8 prof. utile 16

Capacity (VI Sign)	INLET (T) ØC	INLET (T) D	INLET (T) E	OUTLET (P) ØC	OUTLET (P) D	OUTLET (P) E
020 to 040	28	52,4	26,2	18	52,4	26,2
050 - 060	42	35,6	69,8	22	52,4	26,2
071 to 100	42	35,6	69,8	24	52,4	26,2

CATALOGUE N° 70
Ref. of RECOMMENDED FLANGES (for speed 1500 rev / min)

	INLET (T)	OUTLET (P)
3020 3025	1" BSP N: 3.500072 - V: 3.505060	1/2" BSP N: 3.500070 - V: 3.505058
3031 3040	1" 1/4 BSP N: 3.500103 - V: 3.505061	3/4" BSP N: 3.500071 - V: 3.505059
3050 3060	1" 1/4 BSP N: 3.500492 - V: 3.505066	1" BSP N: 3.500072 - V: 3.505060
3071 3080	1" 1/2 BSP N: 3.500493 - V: 3.505067	1" BSP N: 3.500072 - V: 3.505060
3090 3100	1" 1/2 BSP N: 3.500493 - V: 3.505067	1" 1/4 BSP N: 3.500103 - V: 3.505061

F.T 30 311

HYDRAULIC GEAR PUMPS SERIES **3** TYPE **ADP**

PUBLISHING 05 / 07 / 2000

P	II Sign	ZF	C	3	VI Sign	H	L	3	0	D04	XII Sign

For CODIFICATION , see data sheet F.T R 0149

N : Nitrile
V : Viton

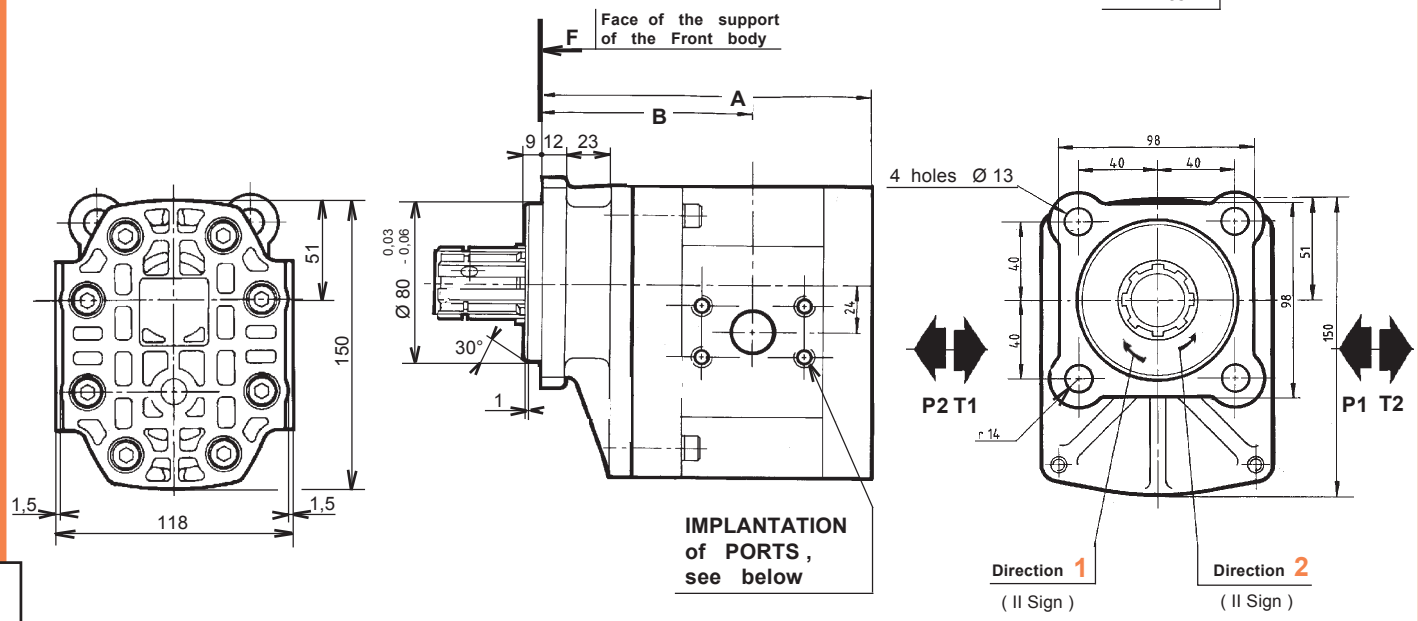

Dimension readings and approximative characteristics subject to modifications .

CHOICE of the CAPACITY (VI Sign)	Dimensions A	Dimensions B
020 025 031 040	169,7	108,3
050 060	196,2	121,5
071 080 090 100	216,2	131,2

Multiple geared pumps , see data sheet F.T 30 849

DRIVING SHAFT

30 (IX - X Sign)
D04 (XI Sign)

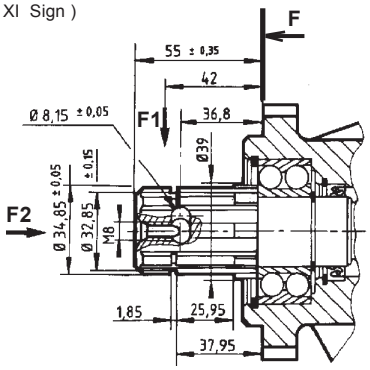

F1 Maxi : 140 daN
F2 Maxi : 50 daN

Parallel splined side
8 x 32 x 36 -
to Norm NF E 22 131
Pushing Minor diameter

Maxi transmissible torque
48 m.daN

IMPLANTATION of PORTS (VII Sign)	Capacity (VI Sign)	INLET (T) ØC	INLET (T) D	INLET (T) E	OUTLET (P) ØC	OUTLET (P) D	OUTLET (P) E	CATALOGUE N° 70 Ref. of RECOMMENDED FLANGES (for speed 1500 rev / min)	INLET (T)	OUTLET (P)
H (HPI)	020 to 040	28	52,4	26,2	18	52,4	26,2	3020 3025	1" BSP N: 3.500072 - V: 3.505060	1/2" BSP N: 3.500070 - V: 3.505058
								3031 3040	1" 1/4 BSP N: 3.500103 - V: 3.505061	3/4" BSP N: 3.500071 - V: 3.505059
	050 - 060	42	35,6	69,8	22	52,4	26,2	3050 3060	1" 1/4 BSP N: 3.500492 - V: 3.505066	1" BSP N: 3.500072 - V: 3.505060
	071 to 100	42	35,6	69,8	24	52,4	26,2	3071 3080	1" 1/2 BSP N: 3.500493 - V: 3.505067	1" BSP N: 3.500072 - V: 3.505060
								3090 3100	1" 1/2 BSP N: 3.500493 - V: 3.505067	1" 1/4 BSP N: 3.500103 - V: 3.505061

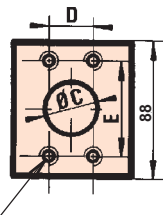

M8 prof. utile 16

P	II Sign	III Sign	IV Sign	3	VI Sign	H	A	2	X Sign	H	L	XIII Sign	XIV Sign	XV Sign	XVI Sign

N : Nitrile
V : Viton

For CODIFICATION , see data sheet F.T R 0150

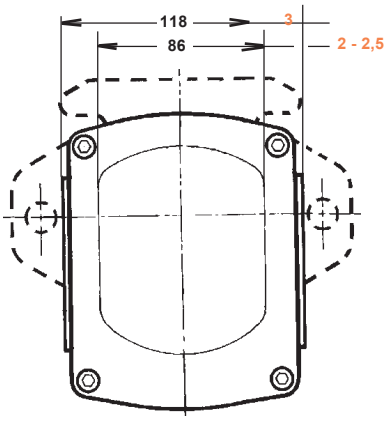

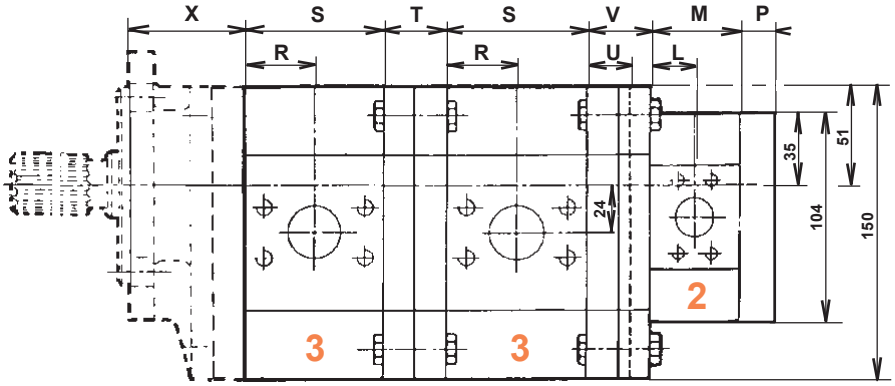

ATTENTION

For common suctions .

The flow of the pump , or pump preceding or following the section including the suction must not exceed **160 l / min .**

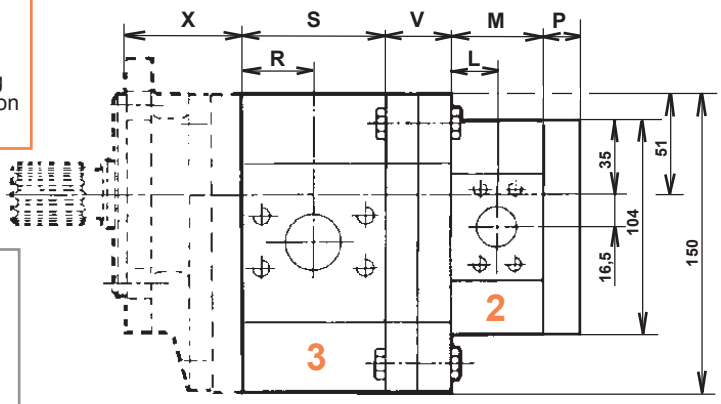

- **Hydraulic characteristics ,**
- **Driving shafts ,**
- **Supply ports implantation**
- **Dimensions of the " Front bodies " : see the technical data sheets of the single pumps quoted below.**

Front body Types (III - IV Sign)	Dimensions X	Data sheets reference
AAP / AEP	68	F.T 30 310
ADP	68	F.T 30 311
ZFC	72	F.T 30 316

JUNCTION BODY

Code A (VIII Sign) — **Common suction ports** (Capacity of the pump without suction ≥ to the half of the capacity of the first stage pump)

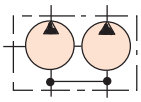

Code D (VIII Sign) — **Independent suction ports (internal communication)** (Fluid and tank imperatively identical)

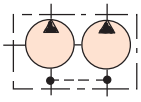

SERIES (V - IX Sign)	Capacity (VI - X Sign)	R	S	T	U	V	L	M	P
3	020 to 040	36,3	72,7	50	25	45			
	050 060	49,5	99,2						
	071 to 100	59,2	119,2						
2	004 to 012						23,5	47,0	25,5
	014 to 022						31	61,6	
	026 030						38,8	77,7	

TORQUE CALCULATION

Q Capacity in cc / rev

P Pressure in bar

ηm Mechanical efficiency (see catalogue C10)

Calculation of the torque for one pump body : $\frac{1,56 \times Q \times P}{1000 \times \eta m} = C$ (m.daN)

Example : P 1 AAP 3060 H A 2008 H L 20 A07 — Pressure : 3060 : 200 bar, 2008 : 150 bar — Speed : 2000 RPM

$\frac{1,56 \times 60 \times 200}{1000 \times 0,88} = 21,27$ m.daN

$\frac{1,56 \times 8 \times 150}{1000 \times 0,85} = 2,2$ m.daN

= **23,47 m.daN** ⟹ Total torque

MULTIPLE GEARED PUMPS

SERIES 3 (THICK FRONT BODY)

PUBLISHING 06 / 02 / 2002

Dimension readings and approximative characteristics subject to modifications .

F.T 30 849

Home - general contents

Basic catalogue contents

CATALOGUE BASIC (B10)

Hydraulic gear pumps

Series 5

Flat Front Body

PUMPS CHARACTERISTICS

MOUNTING POSSIBILITIES

PUMPS TYPE : BAN

Edition 01 / 2003

B10 | 084 | 00

PUMPS CHARACTERISTICS

MODEL (V-VI Sign)	Capacity	PEAK PRESSURE		MAX. WORKING PRESSURE		Maxi Speed	NOMINAL FLOW		Input power (kW) at 1000 RPM and 100 bar	Input torque at 100 bar and m.daN	Approximate weight
							at 1500 RPM	at Maxi Speed			
	cc / rev	bar	PSI	bar	PSI	RPM	l / min	l / min			Kg
5043	43,06	300	4350	255	3700	3000	64,59	129	6,80	6,85	13,4
5052	52,91	300	4350	255	3700	3000	79,36	158,5	8,80	8,42	13,4
5062	62,75	300	4350	255	3700	3000	94,12	188	10,60	9,99	13,6
5072	72,59	300	4350	255	3700	3000	108,88	217,5	12,50	11,55	13,8
5083	83,67	280	4060	240	3480	2700	125,50	226	13,90	13,32	14,3
5093	93,51	250	3625	210	3120	2700	140,26	252,5	15,80	14,89	14,4
5103	103,3	250	3625	210	3120	2700	154,95	279	17,60	16,44	14,4
5125	125,5	250	3625	210	3120	2600	188,25	326	22,50	19,98	14,9
5140	140,2	250	3625	210	3120	2500	210,30	350,5	25,40	22,32	15
5153	153	250	3625	210	3120	2400	229,50	367,5	27,24	24,36	15

Dimension readings and approximative characteristics subject to modifications .

Performances and Output Curves. (Thanks to contact us)
(Tests effected with Oil SHELL Tellus T 46)

The pump can only run in one way rotation (Precise the direction of rotation on order).

The working cycles hereunder are possible with hydraulic mineral oil for viscosities between 12 and 150 cSt (65,2 and 700 SUS) .

The minimum viscosity of 12 cSt (65,2 SUS) is available for a maximum temperature in the hydraulic circuit .

Working temperature : - 20 °C (4 °F) to + 80 °C (176 °F) (140 °C (284 °F) with Viton shaft seal).

Full flow filtration : 10 to 15 microns at the pressure port of the pump or on the return circuit .
Filtration on the suction side : 125 microns .

Pressure at the inlet of the pump :
- Minimum 0,7 bar absolute (Maxi depressure 300 millibar with regard to the air pressure).
- Maximum 2 bar absolute or 1 bar over the air pressure .

The hereabove characteristics concern the pumps driven by elastic couplings perfectly aligned without any external radial or axial force .

For any other coupling , see technical data sheet F.T R 0009 .

For use at maximum working conditions and/or intensive cycles, thanks to consult our technical sales service for validation.

TORQUE CALCULATON

Q Capacity in cc / rev

P Pressure in bar

ηm Mechanical efficiency (see catalogue C10)

Calculation of the torque : $\frac{1,56 \times Q \times P}{1000 \times \eta m} = C$ (m.daN)

Example : P 1 BAN 5053 H L 10 B05

Pressure : 150 bar
Speed : 2000 RPM

Torque = $\frac{1,56 \times 63 \times 150}{1000 \times 0,90}$ = 16,38 m.daN

F.T R 0226

" BASIC " CATALOGUE MOUNTING POSSIBILITIES

FRONT BODY (III - IV Sign)	CENTRAL BODY (VII Sign)	REAR BODY (VIII Sign)	TYPE and SHAFT CODE (IX - X - XI Sign)	
B	H	L	10	20
BAN			10B05	20C05

other possibilities : please refer to " GENERAL " catalogue G10

Our " BASIC" catalogue includes versions of our series 0 to 5 pumps according to European and American Standards (SAE) .

HYDRAULIC GEAR PUMPS

SERIES 5 (FLAT FRONT BODY)

Dimension readings and approximative characteristics subject to modifications .

F.T R 0235

PUBLISHING 05 / 07 / 2000

P	II Sign	BA	N	5	VI Sign	H	L	IX Sign	X Sign	XI Sign	XII Sign

For CODIFICATION , see data sheet F.T R 0149

N : Nitrile
V : Viton

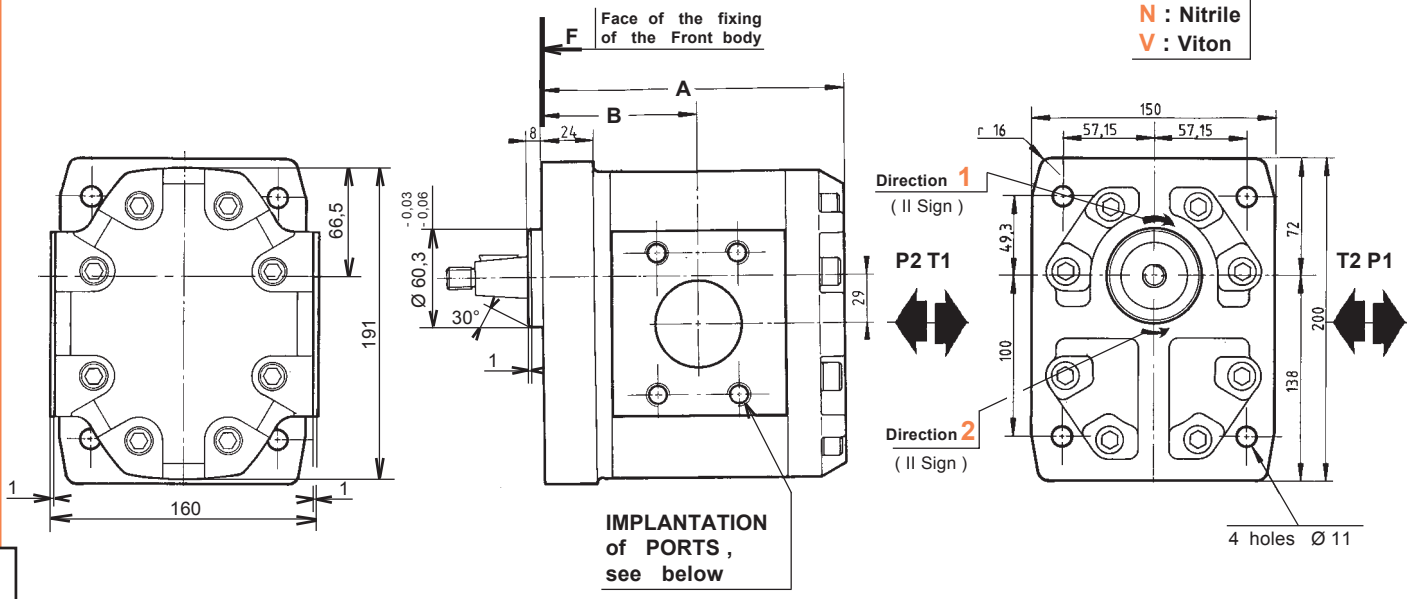

Dimension readings and approximative characteristics subject to modifications .

CHOICE of the CAPACITY (VI Sign)	Dimensions A	Dimensions B
043 052 062 072	179	88,7
083 093 103	191	95
125 140 153	212,2	105,5

CHOICE of DRIVING SHAFTS

10 (IX - X Sign)
B05 (XI Sign)
Taper 1 / 8

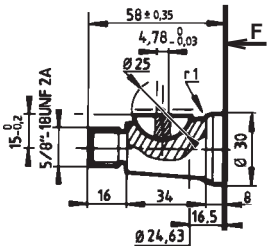

Delivered with Nut Réf. : 101 877

Maxi transmissible torque
80 m.daN

20 (IX - X Sign)
C05 (XI Sign)

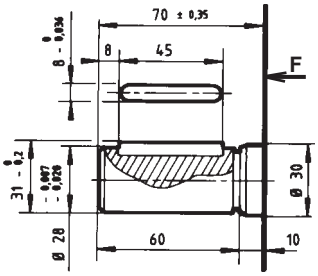

Maxi transmissible torque
40 m.daN

IMPLANTATION of PORTS (VII Sign)	Capacity (VI Sign)	INLET (T) ØC	INLET (T) D	INLET (T) E	OUTLET (P) ØC	OUTLET (P) D	OUTLET (P) E
H (HPI) M14 effective depth 25	043 to 072	55	50,8	89	38	35,6	69,8
	082 to 153	65	50,8	89	38	35,6	69,8

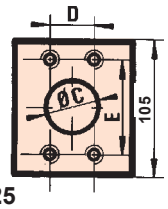

CATALOGUE N° 70
Ref. of RECOMMENDED FLANGES (for speed 1500 rev / min)

	INLET (T)	OUTLET (P)
5043	1" 1/4 BSP N: 3.550026 - V: 3.550397	3/4" BSP N: 3.550022 - V: 3.550392
5052 5062	1" 1/4 BSP N: 3.550026 - V: 3.550397	1" BSP N: 3.550023 - V: 3.550393
5072	1" 1/2 BSP N: 3.550027 - V: 3.550398	1" BSP N: 3.550023 - V: 3.550393
5083	1" 1/2 BSP N: 3.550027 - V: 3.550398	1" BSP N: 3.550023 - V: 3.550393
5093 5103	1" 1/2 BSP N: 3.550027 - V: 3.550398	1" 1/4 BSP N: 3.550024 - V: 3.550394
5125 5140	2" BSP N: 3.550028 - V: 3.5510399	1" 1/4 BSP N: 3.550024 - V: 3.550394
5153	2" 1/2 BSP N: 3.550034 - V: 3.550400	1" 1/4 BSP N: 3.550024 - V: 3.550394

F.T 50 299

HYDRAULIC GEAR PUMPS SERIES 5 TYPE BAN

PUBLISHING 05 / 07 / 2000

Home - general contents

Basic catalogue contents

CATALOGUE BASIC (B10)

Hydraulic gear pumps

Series 5

Thick Front Body

PUMPS CHARACTERISTICS

MOUNTING POSSIBILITIES

PUMPS TYPE : AAP

Edition 01 / 2003

B10 | 090 | 00

PUMPS CHARACTERISTICS

MODEL (V-VI Sign)	Capacity	PEAK PRESSURE		MAX. WORKING PRESSURE		Maxi Speed	NOMINAL FLOW at 1500 RPM	NOMINAL FLOW at Maxi Speed	Input power (kW) at 1000 RPM and 100 bar	Input torque at 100 bar and m.daN	Approximate weight
	cc / rev	bar	PSI	bar	PSI	RPM	l / min	l / min			Kg
5043	43,06	300	4350	255	3700	3000	64,59	129	6,80	6,85	14,2
5052	52,91	300	4350	255	3700	3000	79,36	158,5	8,80	8,42	14,2
5062	62,75	300	4350	255	3700	3000	94,12	188	10,60	9,99	14,4
5072	72,59	300	4350	255	3700	3000	108,88	217,5	12,50	11,55	14,6
5083	83,67	280	4060	240	3480	2700	125,50	226	13,90	13,32	15,1
5093	93,51	250	3625	210	3120	2700	140,26	252,5	15,80	14,89	15,2
5103	103,3	250	3625	210	3120	2700	154,95	279	17,60	16,44	15,2
5125	125,5	250	3625	210	3120	2600	188,25	326	22,50	19,98	15,7
5140	140,2	250	3625	210	3120	2500	210,30	350,5	25,40	22,32	15,8
5153	153	250	3625	210	3120	2400	229,50	367,5	27,24	24,36	15,8

Dimension readings and approximative characteristics subject to modifications .

Performances and Output Curves. (Thanks to contact us)

(Tests effected with Oil SHELL Tellus T 46)

The pump can only run in one way rotation (Precise the direction of rotation on order) .

The working cycles hereunder are possible with hydraulic mineral oil for viscosities between 12 and 150 cSt (65,2 and 700 SUS) .

The minimum viscosity of 12 cSt (65,2 SUS) is available for a maximum temperature in the hydraulic circuit .

Working temperature : - 20 °C (4 °F) to + 80 °C (176 °F) (140 °C (284 °F) with Viton shaft seal) .

Full flow filtration : 10 to 15 microns at the pressure port of the pump or on the return circuit .
Filtration on the suction side : 125 microns .

Pressure at the inlet of the pump :
- Minimum 0,7 bar absolute (Maxi depressure 300 millibar with regard to the air pressure) .
- Maximum 2 bar absolute or 1 bar over the air pressure .

The hereabove characteristics concern the pumps driven by elastic couplings perfectly aligned without any external radial or axial force .

For any other coupling , see technical data sheet F.T R 0009 .

For use at maximum working conditions and/or intensive cycles, thanks to consult our technical sales service for validation.

TORQUE CALCULATON

Q Capacity in cc / rev

P Pressure in bar

ηm Mechanical efficiency (see catalogue C10)

Calculation of the torque : $\frac{1,56 \times Q \times P}{1000 \times \eta m} = C$ (m.daN)

Example : P 1 AAP 5053 H L 20 A05

Pressure : 150 bar
Speed : 2000 RPM

Torque = $\frac{1,56 \times 63 \times 150}{1000 \times 0,90}$ = 16,38 m.daN

F.T R 0227

" BASIC " CATALOGUE
MOUNTING POSSIBILITIES

FRONT BODY (III - IV Sign)	CENTRAL BODY (VII Sign)	REAR BODY (VIII Sign)	TYPE and SHAFT CODE (IX - X - XI Sign)	
A	H	L	20	30
AAP			20A05	30A04

other possibilities : please refer to " GENERAL " catalogue G10

Our " BASIC" catalogue includes versions of our series 0 to 5 pumps according to European and American Standards (SAE) .

HYDRAULIC GEAR PUMPS

SERIES 5 (THICK FRONT BODY)

Dimension readings and approximative characteristics subject to modifications .

F.T R 0219

PUBLISHING 05 / 07 / 2000

P	II Sign	AA	P	5	VI Sign	H	L	IX Sign	IX Sign	XI Sign	XII Sign

For CODIFICATION , see data sheet F.T R 0149

N : Nitrile
V : Viton

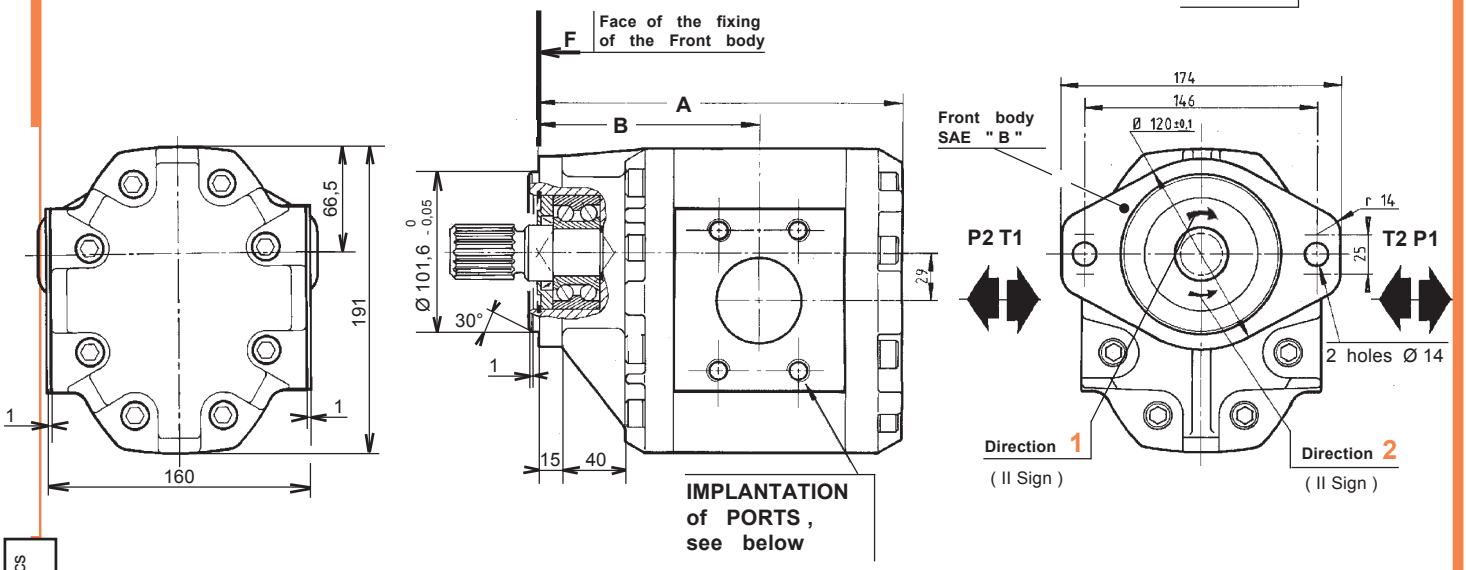

Dimension readings and approximative characteristics subject to modifications .

CHOICE of the CAPACITY (VI Sign)	Dimensions A	Dimensions B
043 052 062 072	230	139,7
083 093 103	242	146
125 140 153	263,2	156,5

CHOICE of DRIVING SHAFTS

20 (IX - X Sign)
A05 (XI Sign)

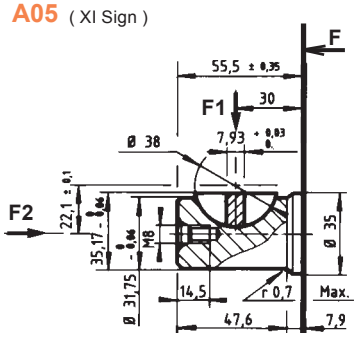

F1 Maxi : 150 daN
F2 Maxi : 50 daN

Maxi transmissible torque
43 m.daN

30 (IX - X Sign)
A04 (XI Sign)

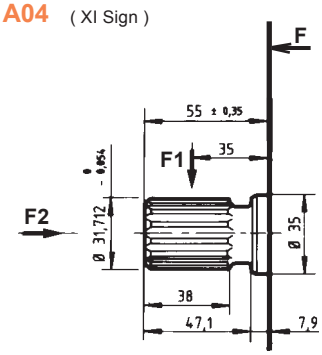

Involute spline to SAE
Standard - 14 theet - 1" 1 / 4 SAE
Pitch 12 / 24
30° Pressure angle

F1 Maxi : 150 daN
F2 Maxi : 50 daN

Maxi transmissible torque
69 m.daN

IMPLANTATION of PORTS

(VII Sign)

H
(HPI)

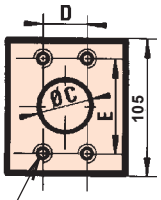

M14
effective depth 25

Capacity (VI Sign)	INLET (T) ØC	INLET (T) D	INLET (T) E	OUTLET (P) ØC	OUTLET (P) D	OUTLET (P) E
043 to 072	55	50,8	89	38	35,6	69,8
082 to 153	65	50,8	89	38	35,6	69,8

CATALOGUE N° 70
Ref. of RECOMMENDED FLANGES (for speed 1500 rev / min)

	INLET (T)	REFOULEMENT (P)
5043	1" 1/4 BSP N: 3.550026 - V: 3.550397	3/4" BSP N: 3.550022 - V: 3.550392
5052 5062	1" 1/4 BSP N: 3.550026 - V: 3.550397	1" BSP N: 3.550023 - V: 3.550393
5072	1" 1/2 BSP N: 3.550027 - V: 3.550398	1" BSP N: 3.550023 - V: 3.550393
5083	1" 1/2 BSP N: 3.550027 - V: 3.550398	1" BSP N: 3.550023 - V: 3.550393
5093 5103	1" 1/2 BSP N: 3.550027 - V: 3.550398	1" 1/4 BSP N: 3.550024 - V: 3.550394
5125 5140	2" BSP N: 3.550028 - V: 3.5510399	1" 1/4 BSP N: 3.550024 - V: 3.550394
5153	2" 1/2 BSP N: 3.550034 - V: 3.550400	1" 1/4 BSP N: 3.550024 - V: 3.550394

Home - general contents

Basic catalogue contents

CATALOGUE BASIC (B10)

Hydraulic gear pumps

Series 4

Flat Front Body

PUMPS CHARACTERISTICS

MOUNTING POSSIBILITIES

PUMPS TYPE : CBN

Edition 01 / 2003

B10 | 096 | 00

PUMPS CHARACTERISTICS

MODEL (V-VI Sign)	Capacity	PEAK PRESSURE		MAX. WOIRKING PRESSURE		Maxi SPEED RPM	NOMINAL FLOW at 1500 RPM	NOMINAL FLOW at Maxi Speed	Input power (kW) at 1000 RPM and 100 bar	Input torque at 100 bar and m.daN	Approximate weight
	cc / rev	bar	PSI	bar	PSI		l / min	l / min			Kg
4075	075	200	2900	170	2465	2500	112,5	187,5	19,37	14,10	17
4110	110	200	2900	170	2465	2500	165	275	28,42	20,60	17,2
4150	150	200	2900	170	2465	2500	225	375	28,60	28,10	17,4
4175	175	175	2537	150	2175	2500	262,5	437,5	33,67	32,80	19
4212	212	150	2175	130	1885	2500	318	530	40	39	19,4
4250	250	125	1812	105	1523	2000	375	500	46,46	45,23	20

Performances and Output Curves. (Thanks to contact us)
(Tests effected with Oil SHELL Tellus T 46)

Dimension readings and approximative characteristics subject to modifications .

The pump can only run in one way rotation (Precise the direction of rotation on order) .

The working cycles hereunder are possible with hydraulic mineral oil for viscosities between 12 and 150 cSt (65,2 and 700 SUS) .

The minimum viscosity of 12 cSt (65,2 SUS) is available for a maximum temperature in the hydraulic circuit .

Working temperature : - 20 °C (4 °F) to + 80 °C (176 °F) (140 °C (284 °F) with Viton shaft seal) .

Full flow filtration : 10 to 15 microns at the pressure port of the pump or on the return circuit .
Filtration on the suction side : 125 microns .

Pressure at the inlet of the pump :
- Minimum 0,7 bar absolute (Maxi depressure 300 millibar with regard to the air pressure) .
- Maximum 2 bar absolute or 1 bar over the air pressure .

The hereabove characteristics concern the pumps driven by elastic couplings perfectly aligned without any external radial or axial force .

For any other coupling , see technical data sheet F.T R 0009 .

For use at maximum working conditions and/or intensive cycles, thanks to consult our technical sales service for validation.

TORQUE CALCULATION

Q Capacity in cc / rev

P Pressure in bar

η_m Mechanical efficiency (see catalogue C10)

Calculation of the torque : $\frac{1,56 \times Q \times P}{1000 \times \eta_m} = C$ (m.daN)

Example : P 1 CBN 4175 H L 20 C06

Pressure : 150 bar
Speed : 2000 RPM

Torque $= \frac{1,56 \times 175 \times 200}{1000 \times 0,85}$ = 48,17 m.daN

F.T R 0228

PUBLISHING 06 / 02 / 2002

" GENERAL " CATALOGUE MOUNTING POSSIBILITIES

FRONT BODY (III - IV Sign) C	CENTRAL BODY (VII Sign) H	REAR BODY (VIII Sign) L	TYPE and SHAFT CODE (IX - X - XI Sign) 20
CBN			20C06

other possibilities : please refer to " GENERAL " catalogue G10

Our " BASIC" catalogue includes versions of our series 0 to 5 pumps according to European and American Standards (SAE) .

Dimension readings and approximative characteristics subject to modifications .

HYDRAULIC GEAR PUMPS

SERIES 4 (FLAT FRONT BODY)

PUBLISHING 05 / 07 / 2000

P	II Sign	CB	N	4	VI Sign	H	L	IX Sign	X Sign	XI Sign	XII Sign

For CODIFICATION , see data sheet F.T R 0149

N : Nitrile
V : Viton

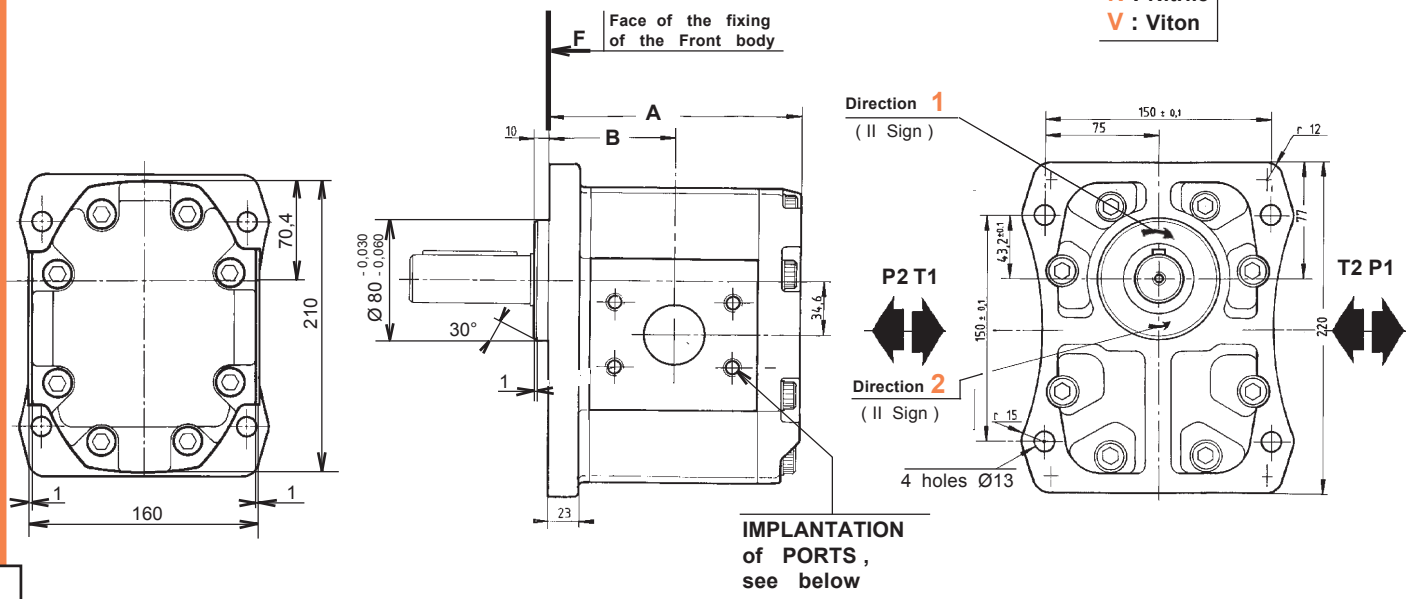

Dimension readings and approximative characteristics subject to modifications .

CHOICE of the CAPACITY (VI Sign)	Dimensions A	Dimensions B
075 110 150	175	85,5
175 212 250	203	99,5

DRIVING SHAFT

20 (IX - X Sign)
C06 (XI Sign)

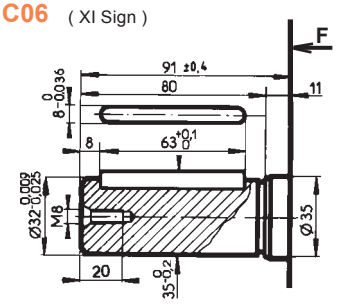

Max. transmissible torque
70 m.daN

IMPLANTATION of PORTS (VII Sign)	Capacity (VI Sign)	INLET (T) ØC	INLET (T) D	INLET (T) E	OUTLET (P) ØC	OUTLET (P) D	OUTLET (P) E
H (HPI)	075 to 150	60	77,8	42,6	40	77,8	42,9
	175 to 250	70	89	50,8	45	77,8	42,9

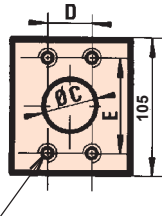

M12
effective depth 22

CATALOGUE N° 70
Ref. RECOMMENDED FLANGES (for speed 1500 rev / min)

	INLET (T)	OUTLET (P)
4075	1 " 1 / 4 BSP N: 4.500438 V: 4.505071	1 " BSP N: 4.500437 V: 4.505070
4110	1 " 1 / 2 BSP N: 4.500439 V: 4.504871	1 " 1 / 4 BSP N: 4.500438 V: 4.505071
4150	2 " BSP N: 4.500440 V: 4.505072	1 " 1 / 2 BSP N: 4.500439 V: 4.504871
4175	2 " BSP N: 4.500442 V: 4.505073	1 " 1 / 2 BSP N: 4.500439 V: 4.504871
4212	2 " 1 / 2 BSP N: 4.500443 V: 4.505074	1 " 1 / 2 BSP N: 4.500439 V: 4.504871
4250	2 " 1 / 2 BSP N: 4.500443 V: 4.505074	2 " BSP N: 4.500440 V: 4.505072

F.T 40 298

HYDRAULIC GEAR PUMPS SERIES 4 TYPE CBN

PUBLISHING 25 / 10 / 2001